压力开关和传感器
Pressure switches & sensors

2020

EUROSWITCH
excellence in sensors

压力传感器
压差指示器
真空开关
压力开关

Pressure transducers
Differential indicators
Vacuum switches
Pressure switches

目录
PRODUCTS INDEX

页 pag.	型号 mod.	
10		认证 / *Certifications*
11		简介 / *Introduction*
16		代码转换表 / *Code conversion table*
17		膜片 / 密封件选择指南 / *Guide to selecting the diaphragm/seal*
18		**保护盖和安全连接器 / *Protection cap and connectors***
19		**集成连接器 / *Integrated connectors***
20		**根据要求提供待接线版本的连接器 / *Ready wired versions with connector on request***
21		**具有诊断能力的压力开关和压差指示器** ***Pressure switches and differential indicators with diagnostic capability***
22	**23**	**制动开关 / *Brake switch***
		压力开关 / *Pressure Switches*
23	**24**	压力开关 - SPDT 触点 / *Pressure switch with SPDT contacts*
24	**24C**	压力开关 - SPDT 触点 / *Pressure switch with SPDT contacts*
25	**24F**	压力开关 - SPDT 触点 - 内螺纹 *Pressure switch with SPDT contacts - female thread*
26	**25R**	微型压力开关 / *Mini pressure switch*
27	**25D**	微型压力开关快速动作 / *Mini pressure switch snap action*
28	**26-266**	固定设定压力开关 / *Fixed setting pressure switch*
29	**27N-28N**	压力开关 - 可调迟滞 - SPDT 触点 *Pressure switch - adjustable hysteresis - SPDT contacts*
30	**30-30V**	活塞压力开关 ≤ 250V / *Piston pressure switch ≤ 250V*
31	**31-31V**	膜片压力开关 ≤ 250V / *Diaphragm pressure switch ≤ 250V*
32	**40-40V**	活塞压力开关 ≤ 48V / *Piston pressure switch ≤ 48V*
33	**41-41V**	膜片压力开关 ≤ 48V / *Diaphragm pressure switch ≤ 48V*
34	**41B-41BV** **41C-41CV**	膜片压力开关 - 过压安全 600 bar *Diaphragm pressure switch - over pressure safety 600 bar*
35	**42-42V**	膜片压力开关≤48V - 内螺纹 *Diaphragm pressure switch ≤ 48V female thread*
36	**46**	低压活塞压力开关 - SPDT 触点 *Piston pressure switch for low pressure - SPDT contacts*
37	**48**	活塞压力开关 – SPDT 触点 / *Piston pressure switch with SPDT contacts*
38	**49**	膜片压力开关 - SPDT 触点 *Diaphragm pressure switch with SPDT contacts*
39	**67**	双微动压力开关 / *Pressure switch with double microswitch*

页 pag.	型号 mod.	
40	**681**	可视设置刻度压力开关 *Pressure switch with visual setting scale*
41	**682**	可视设置刻度压力开关 *Pressure switch with visual setting scale*
42	**691**	带调节环的活塞压力开关 *Piston pressure switch with adjusting ring*
43	**692**	带调节环的活塞压力开关 *Piston pressure switch with adjusting ring*
		机械式真空开关 / *Electromechanical vacuum switches*
44	**35-35V**	真空开关 ≤ 48V / *Vacuum switch ≤ 48V*
45	**37-37V**	真空开关 ≤ 250V / *Vacuum switch ≤ 250V*
46	**357-357V**	真空开关 ≤ 48V / *Vacuum switch ≤ 48V*
47	**377-377V**	真空开关 ≤ 250V / *Vacuum switch ≤ 250V*
48	**387**	膜片真空开关 - SPDT 触点 / *Diaphragm vacuum switch - SPDT contacts*
49		**压差堵塞指示器 / *Differential clogging indicators***
50	**80**	常开/常闭 电压差指示器 / *Electrical differential indicator NO/NC*
51	**81**	电压差指示器 / *Electrical differential indicator*
52	**82**	可旋转的电压差指示器 *Electrical differential indicator with rotating system*
53	**83**	电压差指示器 *Electrical differential indicator*
54	**83T**	带温控的电压差指示器 *Electrical differential indicator with thermostat*
55	**700**	温度–压力开关 / *Thermo-pressure switch*
56	**86**	目视压差指示器 Hex 30 / *Optical differential indicator Hex 30*
57	**87**	目视压差指示器 Hex 24 / *Optical differential indicator Hex 24*
58	**980**	电子压差式变送器 / *Electronical differential transmitter*
59	**983**	带 LED 电子压差指示器 / *Electronical differential indicator with Led*
60	**987**	IO-Link电子压差指示器 / *IO-Link Electronical differential indicator*
61	**SCD**	传感器配置设备 4. 0 / *Sensor Configurator Device 4.0*
62		**压力传感器 / *Pressure transducers***
63	**ESP**	4-20mA 压力传感器 / *Pressure transducer 4-20mA*
64		配件 / *Accessories*

研发 实验室

research and development laboratories

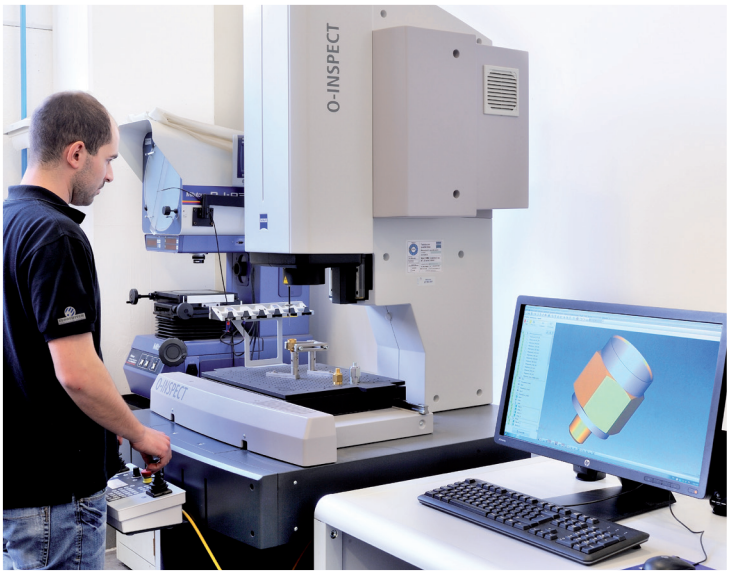

进货质量控制

incoming quality control

生产
概述

production
overview

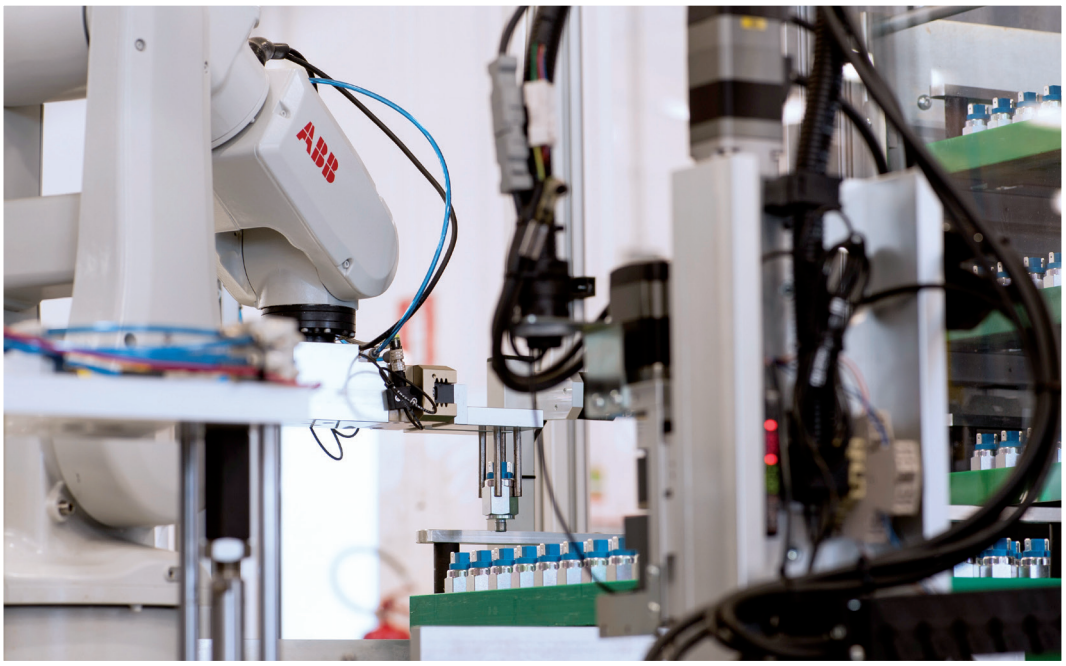

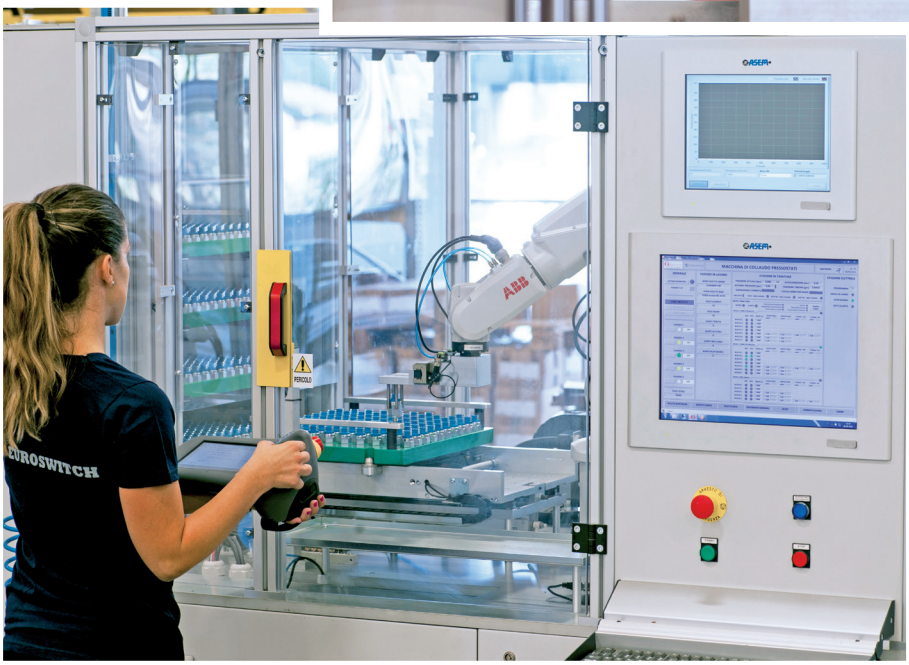

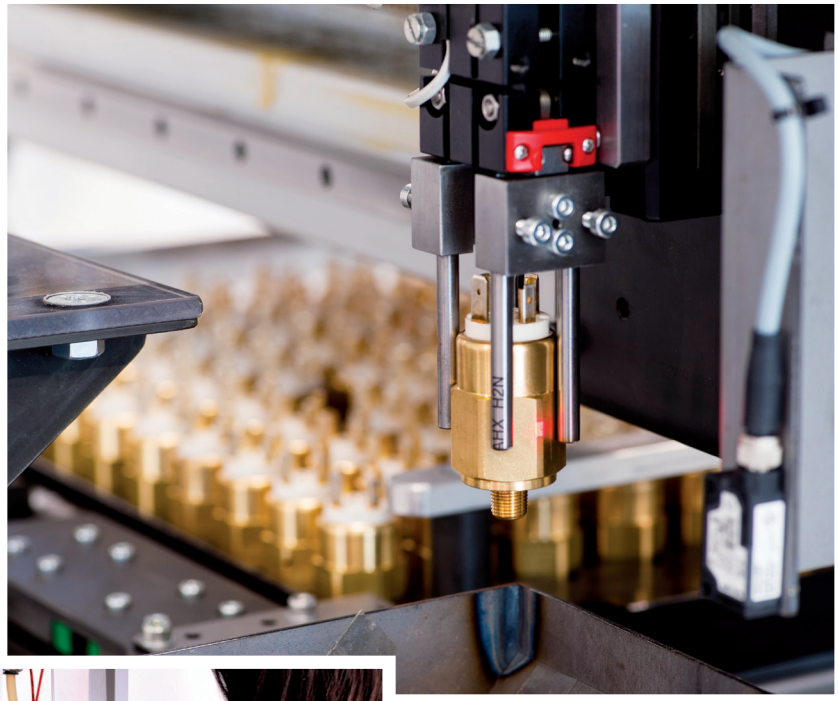

最终质量控制

final quality control

EUROSWITCH
made in Italy
EUROSWITCH
MOD 692
bar
MADE IN ITALY
EUROSWITCH
made in Italy

认证 - Certifications

DNV·GL

MANAGEMENT SYSTEM CERTIFICATE

Certificate no.: 10000383048-MSC-ACCREDIA-ITA
Initial certification date: 23 September 1997
Valid: 15 December 2020 – 14 December 2023

This is to certify that the management system of

EUROSWITCH S.r.l.
Via Provinciale 15 - 25057 Sale Marasino (BS) - Italy
and the sites as mentioned in the appendix accompanying this certificate

has been found to conform to the Quality Management System standard:
ISO 9001:2015

This certificate is valid for the following scope:
Design and manufacture of electronic and electromechanical level, pressure, temperature, flow, speed and rotation sensors, including the processes of potting, assembling, welding and testing of electronic and electromechanical components
(IAF: 19)

Place and date: **Vimercate (MB), 07 January 2021**
For the issuing office: **DNV GL - Business Assurance Via Energy Park, 14, - 20871 Vimercate (MB) - Italy**
Zeno Beltrami Management Representative

Lack of fulfilment of conditions as set out in the Certification Agreement may render this Certificate invalid.
ACCREDITED UNIT: DNV GL Business Assurance Italia S.r.l., Via Energy Park, 14 - 20871 Vimercate (MB) - Italy - TEL: +39 68 99 905. www.dnvgl.it

质量管理体系认证 UNI EN ISO 9001-2015 (ISO 9001-2015)
Quality Management System UNI EN ISO 9001-2015 (ISO 9001-2015)

DNV·GL

MANAGEMENT SYSTEM CERTIFICATE

Certificate no.: 10000383067-MSC-ACCREDIA-ITA
Initial certification date: 21 December 2005 (by different Certification Body)
Valid: 15 December 2020 – 14 December 2023

This is to certify that the management system of

EUROSWITCH S.r.l.
Via Provinciale 15 - 25057 Sale Marasino (BS) - Italy
and the sites as mentioned in the appendix accompanying this certificate

has been found to conform to the Environmental Management System standard:
ISO 14001:2015

This certificate is valid for the following scope:
Design and manufacture of electronic and electromechanical level, pressure, temperature, flow, speed and rotation sensors, including the processes of potting, assembling, welding and testing of electronic and electromechanical components
(IAF 19)
Evaluated according to the requirements of Technical Regulations RT-09

Place and date: **Vimercate (MB), 30 December 2020**
For the issuing office: **DNV GL - Business Assurance Via Energy Park, 14, - 20871 Vimercate (MB) - Italy**
Zeno Beltrami Management Representative

Lack of fulfilment of conditions as set out in the Certification Agreement may render this Certificate invalid.
ACCREDITED UNIT: DNV GL Business Assurance Italia S.r.l., Via Energy Park, 14 - 20871 Vimercate (MB) - Italy - TEL: +39 68 99 905. www.dnvgl.it

质量管理体系认证UNI EN ISO 14001 - 2015 (ISO 14001-2015)
Quality Management System UNI EN ISO 14001-2015 (ISO 14001-2015)

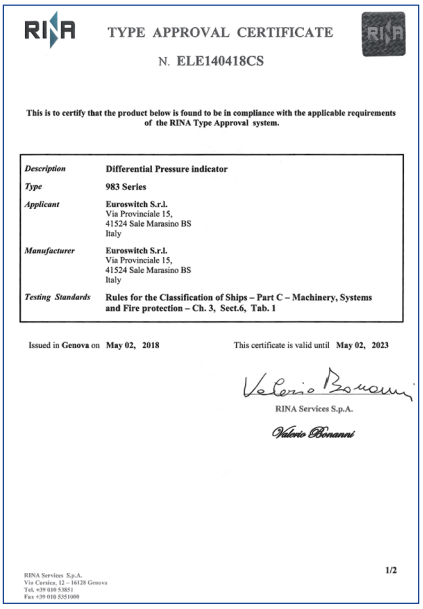

RINA TYPE APPROVAL CERTIFICATE
N. ELE140418CS

This is to certify that the product below is found to be in compliance with the applicable requirements of the RINA Type Approval system.

Description	**Differential Pressure indicator**
Type	**983 Series**
Applicant	**Euroswitch S.r.l.** Via Provinciale 15, 41524 Sale Marasino BS Italy
Manufacturer	**Euroswitch S.r.l.** Via Provinciale 15, 41524 Sale Marasino BS Italy
Testing Standards	**Rules for the Classification of Ships – Part C – Machinery, Systems and Fire protection – Ch. 3, Sect.6, Tab. 1**

Issued in **Genova** on **May 02, 2018** This certificate is valid until **May 02, 2023**

RINA Services S.p.A.

1/2

RINA Services S.p.A.
Via Corsica, 12 – 16128 Genova
Tel. +39 010 53851
Fax +39 010 5351000

RINA认证
RINA Certification

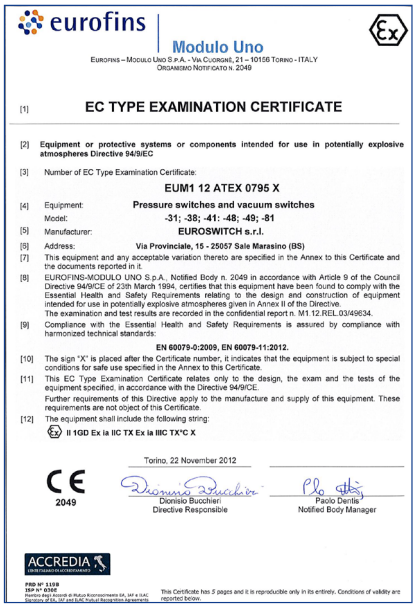

eurofins | Modulo Uno
Eurofins – Modulo Uno S.p.A. - Via Cuorgnè, 21 - 10156 Torino - ITALY
Organismo Notificato n. 2049

[1] **EC TYPE EXAMINATION CERTIFICATE**

[2] **Equipment or protective systems or components intended for use in potentially explosive atmospheres Directive 94/9/EC**

[3] Number of EC Type Examination Certificate:
EUM1 12 ATEX 0795 X

[4] Equipment: **Pressure switches and vacuum switches**
Model: **-31; -38; -41: -48; -49; -81**

[5] Manufacturer: **EUROSWITCH s.r.l.**

[6] Address: **Via Provinciale, 15 - 25057 Sale Marasino (BS)**

[7] This equipment and any acceptable variation thereto are specified in the Annex to this Certificate and the documents reported in it.

[8] EUROFINS-MODULO UNO S.p.A., Notified Body n. 2049 in accordance with Article 9 of the Council Directive 94/9/CE of 23th March 1994, certifies that this equipment have been found to comply with the Essential Health and Safety Requirements relating to the design and construction of equipment intended for use in potentially explosive atmospheres given in Annex II of the Directive.
The examination and test results are recorded in the confidential report n. M1.12.REL.03/49634.

[9] Compliance with the Essential Health and Safety Requirements is assured by compliance with harmonized technical standards:
EN 60079-0:2009, EN 60079-11:2012.

[10] The sign "X" is placed after the Certificate number, it indicates that the equipment is subject to special conditions for safe use specified in the Annex to this Certificate.

[11] This EC Type Examination Certificate relates only to the design, the exam and the tests of the equipment specified, in accordance with the Directive 94/9/CE.
Further requirements of this Directive apply to the manufacture and supply of this equipment. These requirements are not object of this Certificate.

[12] The equipment shall include the following string:
II 1GD Ex ia IIC TX Ex ia IIIC TX°C X

Torino, 22 November 2012

CE 2049
Dionisio Bucchieri – Directive Responsible
Paolo Deriti – Notified Body Manager

ACCREDIA
PRD N° 1129
ISP N° 0102
Istituto degli Accordi di Mutuo Riconoscimento EA, IAF e ILAC
Signatory of EA, IAF and ILAC Mutual Recognition Agreements

This Certificate has 5 pages and it is reproducible only in its entirely. Conditions of validity are reported below.

ATEX认证
ATEX Certification

IECEx Certificate of Conformity

INTERNATIONAL ELECTROTECHNICAL COMMISSION
IEC Certification Scheme for Explosive Atmospheres
for rules and details of the IECEx Scheme visit www.iecex.com

Certificate No.: IECEx EUT 15.0007X
Issue No: 0
Certificate history: Issue No. 0 (2015-10-07)
Status: **Current**
Page 1 of 3
Date of Issue: **2016-10-07**
Applicant: **EUROSWITCH S.r.l.** Via Provinciale, 15 - 25057 Sale Marasino (BS) **Italy**
Electrical Apparatus: **Pressure Switch and Vacuum switch**
Optional accessory:
Type of Protection: **Intrinsic safety "i"**
Marking:
Ex ia I
Ex ia IIC TX
Ex ia IIIC TX°C

Approved for issue on behalf of the IECEx Certification Body: Dionisio Bucchieri
Position: Head of IECEx CB
Signature: (for printed version)
Date:

1. This certificate and schedule may only be reproduced in full.
2. This certificate is not transferable and remains the property of the issuing body.
3. The Status and authenticity of this certificate may be verified by visiting the Official IECEx Website.

Certificate issued by:
Eurofins TECH S.r.l. Via Cuorgnè, n.21 - 10156 Torino Italy
eurofins | Product Testing

IECEx 认证
IECEx Certification

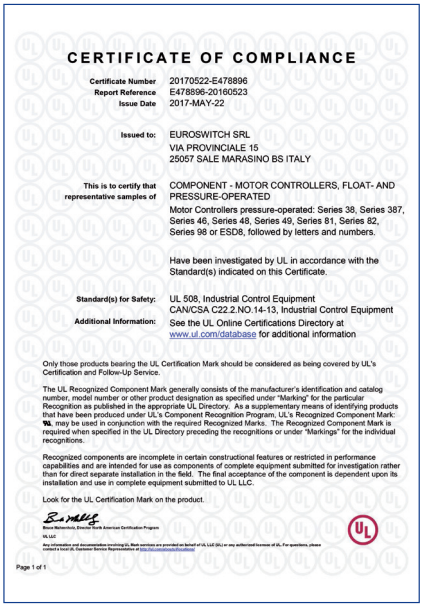

CERTIFICATE OF COMPLIANCE

Certificate Number 20170522-E478896
Report Reference E478896-20160523
Issue Date 2017-MAY-22

Issued to: EUROSWITCH SRL
VIA PROVINCIALE 15
25057 SALE MARASINO BS ITALY

This is to certify that representative samples of: COMPONENT - MOTOR CONTROLLERS, FLOAT- AND PRESSURE-OPERATED
Motor Controllers pressure-operated: Series 38, Series 387, Series 46, Series 48, Series 49, Series 81, Series 82, Series 98 or ESD8, followed by letters and numbers.

Have been investigated by UL in accordance with the Standard(s) indicated on this Certificate.

Standard(s) for Safety: UL 508, Industrial Control Equipment
CAN/CSA C22.2 NO.14-13, Industrial Control Equipment

Additional Information: See the UL Online Certifications Directory at www.ul.com/database for additional information

Only those products bearing the UL Certification Mark should be considered as being covered by UL's Certification and Follow-Up Service.

The UL Recognized Component Mark generally consists of the manufacturer's identification and catalog number, model number or other product designation as specified under "Marking" for the particular Recognition as published in the appropriate UL Directory. As a supplementary means of identifying products that have been produced under UL's Component Recognition Program, UL's Recognized Component Mark: 𝔘𝔏 may be used in conjunction with the required Recognized Marks. The Recognized Component Mark is required when specified in the UL Directory preceding the recognitions or under "Markings" for the individual recognitions.

Recognized components are incomplete in certain constructional features or restricted in performance capabilities and are intended for use as components of complete equipment submitted for investigation rather than for direct separate installation in the field. The final acceptance of the component is dependent upon its installation and use in complete equipment submitted to UL LLC.

Look for the UL Certification Mark on the product.

Bruce Mahrenholz, Director North American Certification Program
UL LLC

Any information and documentation involving UL Mark services are provided on behalf of UL LLC (UL) or any authorized licensee of UL. For questions, please contact a local UL Customer Service Representative at http://ul.com/aboutul/locations/

Page 1 of 1

UL 认证
UL Certification

简介

在制造业或汽车工业等活动领域中，对技术过程的管理都需要控制操作系统的流体压力。这需要将对系统有重要意义的特定压力值与运行机器循环或指示特定情况（泄漏、警报等）的电信号相关联。可以使用我们称为压力和真空开关的元件来控制这些操作，同时可以根据具体应用情况调整这些元件。

主要存在三种类型：
- 带有SPST常开电触点
- 带有SPST常闭电触点
- 带有SPDT三通切换电触点

可以使用固定螺丝来校准开关，该螺丝通过作用于校准弹簧来确定其负载。弹簧抵抗流体在敏感元件（膜片或活塞）上施加的压力推力，仅当达到压力设定值时，才允许电触点闭合或打开。

- 在图1（真空图4）的常开版本中触点断开，即在压力不到的情况 下不存在电流通过。
压力到达设定值后，电触点闭合。
- 图2中（真空图5）展示的是一个在压力不到的情况下带有常闭电触点的压力开关。事实上，我们看到在压力不到的情况下， 电触点闭合，在外触点上有信号显示。压力达到设定值 后，电触点断开，信号停止。
- 在图3（真空图6）的转换触点版本中分流器上（膜片或活塞）的液体压力决定 了微动开关的转换。
- 在图3（真空图6）的转换触点版本中分流器上（膜片或活塞）的液体压力决定 了微动开关的转换。

在这个最新版本中，可以无差别地使 用常闭、常开电触点或两者兼用。

Introduction

The management of technological processes in any field of activity, such as in the manufacturing or automotive industry, requires control of the pressure of the fluids that operate the system. This requires associating a particular pressure value, which is important for the system, to an electrical signal, for instance to run a machine cycle or indicate a particular situation (leaks, alarms, etc.). These operations can be controlled using components, called a PRESSURE and VACUUM SWITCHES, that are adjusted to suit the particular application.

From an electrical point of view, there three main types:
- *with two-way normally-open (NO) electrical contacts (SPST)*
- *with two-way normally-closed (NC) electrical contacts (SPST)*
- *with three-way changeover electrical contacts (SPDT)*

A switch can be calibrated using a set screw which, by acting on a calibration spring, determines its load. The spring opposes the thrust of the pressure exercised by the fluid on the sensitive element (a membrane or piston), allowing the electrical contact to close or open only when the pressure setting is reached.
- *In the NORMALLY OPEN (NO) version on Fig. 1 (Fig. 4 for vacuum), the contact is open, i.e. there is no flow of current in the absence of pressure. When the pressure setting is reached, the electrical contactcloses.*
- *The diagram of Fig. 2 (Fig. 5 for vacuum) shows a pressure switch with NORMALLY CLOSED (NC) contacts in the absence of pressure. We can see that the contacts are closet and the signal is present on the external contacts. When the pressure setting is reached, the electrical contact rises and interrupts the signal.*
- *In the SWITCHING CONTACTS (SPDT) of Fig. 3 (Fig. 6 for vacuum) version, the pressure of the fluid on the separating element (diaphram or piston) causes a microswitch to switch.*
Either NC or NO contacts, or both, can be used in this version.

压力 / Pressure

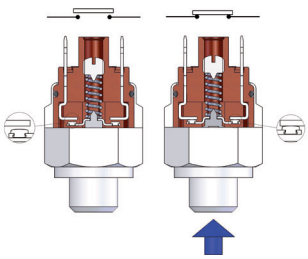

图1 FIG. 1

(非捆绑运行示例 – 常开触点)
(non-binding example - N.O. contact)

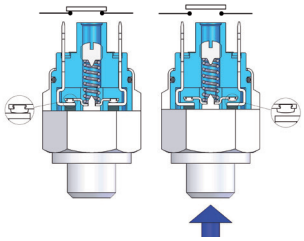

图2 FIG. 2

(非捆绑运行示例 – 常闭触点)
(non-binding example - N.C. Contact)

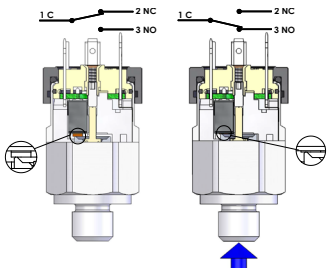

图3 FIG. 3

SPDT单刀双掷触点 (SPDT)
Switching contacts (SPDT)

真空 / Vacuum

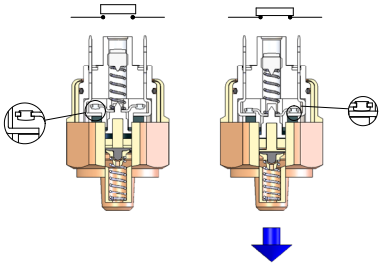

图4 FIG. 4

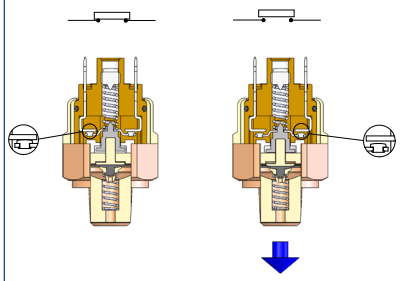

图5 FIG. 5

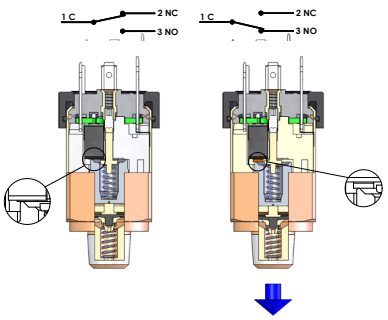

图6 FIG. 6

EUROSWITCH
excellence in sensors

简介 - *Introduction*

连接
我们建议使用合适的密封件装配螺纹圆柱形连接件。对于锥形螺纹连接，通常在施加拧紧力矩期间通过螺纹的永久变形来保证密封。参考值参见下表。

Process connections
While fitting a threaded cylindrical connection, we suggest to use a proper seal for assembly. For conical threaded connection, normally the sealing is guarantee by the permanent deformation of the thread during the application of the tightening torque. For reference value see the table here under.

拧紧力矩 - *TIGHTENING TORQUE*		
螺纹 *Thread*	**机体材料 - *Material Case***	
	电镀钢和不锈钢 AISI *Plated Steel and Stainless AISI*	黄铜 / *Brass*
1/8 NPT - G 1/8" 圆锥 - M10x1 圆锥 1/8 NPT - G 1/8" Conical - M10x1 Conical	最大 30 Nm max. 30 Nm	最大 25 Nm max. 25 Nm
M10x1 圆柱 - G 1/8" 圆柱 M10x1 Cylindrial - G 1/8" Cylindriacal	最大 35 Nm max. 35 Nm	最大 25 Nm max. 25 Nm
G 1/4" 圆锥 - M12x1.5 圆柱 G 1/4" Conical - M12x1,5 Cylindrical	最大 40 Nm max. 40 Nm	最大 35 Nm max. 35 Nm
G 1/4" 圆柱 G 1/4" Cylindrical	最大 50 Nm max. 50 Nm	最大 45 Nm max. 45 Nm

设置
EUROSWITCH 生产固定及可调压力开关。在可调压力开关中，转动调节螺母，将压力设定为期望值，注意不要完全压缩弹簧。顺时针旋转增加压力。设定后用胶粘剂锁紧螺丝。可以将可调压力开关出厂设置为客户要求的压力。该值指示增加压力的干预点。根据具体要求，压力开关可提供减压校准。
在接触电路中的最小电负载下进行校准。在室温下的新产品能够保证声明的公差。使用 SPST 压力开关时，为了正确检测设定的干预点，压力变化率必须为最大值 1 BAR/S。
为了正确检测 SPDT 压力开关使用中设定的干预点，最大压力变化率可在 0.1 BAR/S 至 15 BAR/S 之间变化，具体取决于型号和压力设定。联系 EUROSWITCH 销售部了解更多信息。
最大允许压力变化率为 1.000 BAR/S
压力开关不必用作安全元件。

Settings
Euroswitch makes fixed and adjustable pressure switches. In adjustable pressure switches, turn the regulation nut to set the pressure to the desired value, taking care not to compress the spring fully. Rotate clockwise the increase the pressure. After setting, lock the screw using a gluing agent. Adjustable pressure switches can be factory-set to the pressure required by the customer. This value indicates the point of intervention for increasing pressure. On specific request, pressure switches can be supplied with calibration for decreasing pressure. Calibration is performed under the minimum electric load in the contact circuit. The declared tolerance is guaranteed at room temperature and new product. In the use of the SPST pressure switches, for the correct detection of the setted intervention point, the pressure change rate have to be maximum 1 BAR/s.
For the correct detection of the setted intervention point in the use of the SPDT pressure switches, the maximum pressure change rate may vary between 0.1 BAR/s and 15 Bar/s, depending from the model and the pressure set. Contacts Euroswitch sales dpt. for further information.
The maximum allowed pressure change rate is 1.000 bar/s
The pressure switches don' t have to be used as safety components.

迟滞
迟滞是上升（上）和下降（下）切换点之间的差异。该值取决于许多因素，包括产品型号、设定点和压力斜坡宽度。

Hysteresis
The hysteresis is the difference between the rising (upper) and falling (lower) switching points. The value depends from many factors including: the product model, the set point and the width of the pressure ramp.

迟滞图 / *Hysteresis diagram*

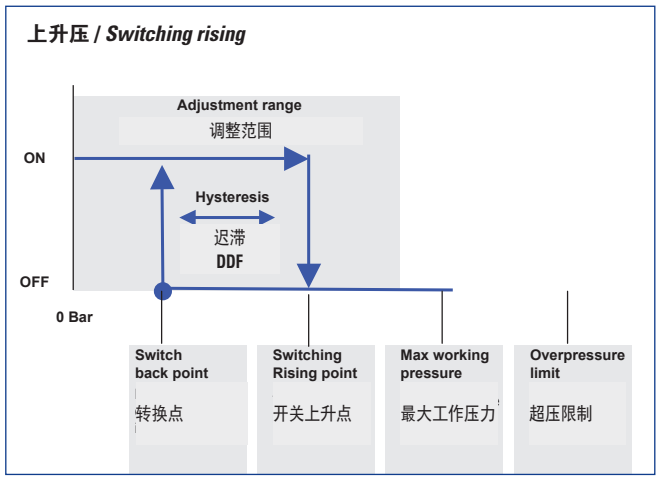

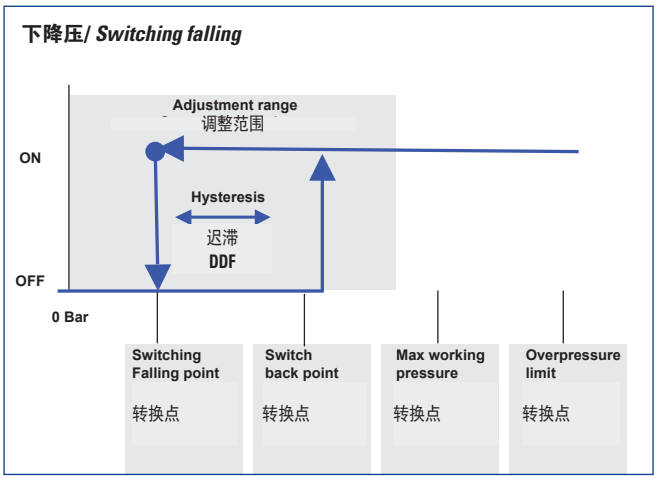

安全压力或超压
指的是 EUROSWITCH 保证压力传感器在给定时间内不会发生结构故障，从而可能导致或物品损坏或人员伤害的最大压力。

Safety pressure or overpressure
This is the maximum pressure at which Euroswitch guarantees that the pressure sensor, for a given time, does not undergo structural failure, which could cause injury or damage things or people.

最大工作压力
指的是传感器所能承受的最大脉动压力，在保持原有规格的同时不会受到任何类型的机电损坏。

Maximum operating pressure
This the maximum pulsating pressure to which the sensor can be subjected without suffering any type of electro-mechanical damage, while maintaining the original specifications.

电气 负载
在与每一系列的压力开关相关的数据中，列入了触点的电气特 性。我们技术部可以为客户解答任何疑问。如果带SPST触点压力开关中的压力变化缓慢，建议不要负载特性接近电触点的 电流极限值的电荷。在这种情况下，建议在压力开关和负荷间插入一个继电器。对于最大开关电压48V以内的产品，需要通过一个SELV类型 的系统供电。推荐的最小开关电流为12 V 20 mA。 对于较小的值可提供带镀金触点的版本。

Electrical load
The electrical characteristics of the contacts are detailed under each series of pressure switches. Our Technical Department can help customers who have any doubts or queries. In the event of a slow pressure variation in pressure switches with SPST contacts, it is advisable not to pilot electrical loads with characteristics close to the current limits of the contacts. In such a case, it is preferable to put a relay between the pressure switch and the load.
For products with max 48 V power must be managed thanks to a SELV system. The minimum recommended switching current is 12 V 20 mA, for versions with a gold-plated contact for smaller values.

冲击和抗震
当受到非正常碰撞或强烈成震动时，压力开关的触点可能会损坏 。
根据EN 60068

Impact and vibration
The pressure switch contact may get damaged if subjected to impact (e.g. if dropped) or strong vibration.
According to EN 60068

安装
建议纵向安装压力开关，电气连接朝上，以避免长时间内在套管中积聚微粒。

Assembly
It is advisable to assemble the pressure switch vertically, with the electrical connection facing upwards, in order to prevent foreign particles from accumulating inside the body.

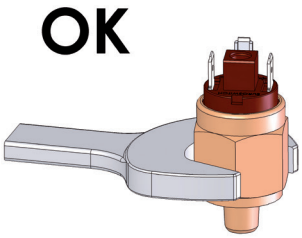

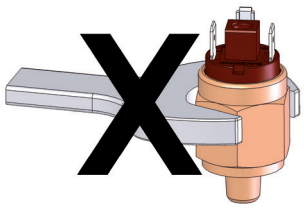

简介 - *Introduction*

保护帽和连接器
我们所有的压力开关都由保护盖和连接器保护。根据类型，防护等级可达IP54或IP65（有些特殊版本可达IP 67和IP 69K）。 请注意，仅在正确插入连接器时，不同类型连接器声明的 IP 等级才有效，否则为 IP00。

EN 60529 保护等级（防护等级）

Caps and connectors
All our pressure switches can be protected by caps and connectors. The protection degree can be IP54 or IP65, depending on the model (IP 67, IP 69K for special version).
Please note that IP grade declared for the different kind of connector is valid only when it is plugged in correctly, otherwise is IP00.

Protection degree (IP code) according to EN 60529

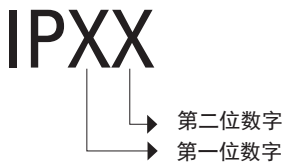

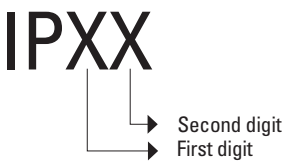

第一位数字：
表示外壳提供的保护级别，防止危险部件（例如电导体、移动部件）和固体异物进入。另参见代码末尾的附加字母。

First digit:
It indicates the level of protection that the enclosure provides against access to hazardous parts (e.g., electrical conductors, moving parts) and the ingress of solid foreign objects. See also the additional letter in the end of the code.

第二位数字：
表示外壳防止水浸入提供的保护级别。

Second digit:
The second digit indicates the level of protection that the enclosure provides against ingress of water.

IP00 不能防止固体颗粒和水。

IP00 Not protected against solid particle nor water.

IP54 防止灰尘和水飞溅。

IP54 Protected against dust and splashes of water.

IP65 完全防止灰尘和低压水射流。

IP65 Totally protected from dust and water low-pressure jets.

IP67 完全防止灰尘和暂时浸泡在深度达 1 米的水中。

IP67 Totally protected against dust and temporary immersion in water up to 1 meter of depth.

IP69K 完全防止灰尘、高压水射流和蒸汽清洗。

IP69K Totally protected against dust, high pressure water jets and steam cleaning.

特别配置
根据特殊要求，可以制作特别配置的压力开关（例如：预装电缆的，带有不锈钢套管的，为使用氧气而进行脱脂的等）；有任何需求，请联系我们的技术-销售部，将会为您推荐最适合您的用途的产品。

Special configurations
Euroswitch also manufactures special pressure switches, such as pre-wired, with a stainless steel case, or degreased for use with oxygen, ozone, etc. Whatever your requirements, feel free to contact our design and sales office staff, who will be able to suggest the most suitable product to meet your requirements.

CE标志

这些产品的设计符合欧盟现行的指令和标准，并根据以下分类，贴有CE标志：
A）在50至1000V之间的交流电和75至1500V之间的直流电电压下运行的产品。

符合以下指令：
-2014/35/UE LVD -（低压指令）并符合EN 60730-1标准及其相关的第2部分。
-2014/30/UE（EMC-电磁兼容性指令），符合EN 60730-1标准及其相关的第2部分。

B）在50V交流电和75 V 直流电电压下运行的产品。
符合以下指令：
-2014/30/UE（EMC-电磁兼容性指令），并符合EN 60730-1标准及其相关的第2部分。

在我们公司总部可以看到上述指令规定的合格声明。

由于Euroswitch产品被归类为非安全组件，所以2006/42/EC《机械指令》不适用。

我们的产品不受制于PED 2014/68/EU《压力设备指令》，因为它们是根据第4条，第3段规定设计的简单组件。

ATEX 2014/34/UE指令也涵盖了在可能爆炸区域安装的版本。

我们的产品符合RoHS规定：有害物质限制规定(RoHS II 2011/65 /UE)

CE *Marking*

All our products are designed in compliance with current European Union Directives and Standards and bear the CE mark, according to the following classification:
a) Products operating at 50V to 1000V AC and 75V to 1500V DC

Comply with :
- *directive 2014/35/EU (LVD – Low Voltage Directive) and in compliance with EN 60730-1 and the relevant part 2.*
- *directive 2014/30/EU (EMC – Electromagnetic Compatibility Directive) and meet the requirements of EN 60730-1 and the relevant part 2.*

b) Products operating at 50V AC and 75V DC comply with:
- *directive 2014/30/EU (EMC - Electromagnetic Compatibility Directive) and meet the requirements of EN 60730-1 and the relevant part 2.*

The Declaration of Conformity prescribed by the aforementioned directives are available at our headquarters.

Machine Directive 2006/42/EC is not applicable as Euroswitch products are classified as non-safety-related products.

Our products are not subject to directive 2014/68/UE (PED – Pressure Equipment Directive) as they are simple component parts designed in accordance with art. 4, paragraph 3.

The versions intended for use in potentially explosive areas are covered by the ATEX Directive 2014/34/EU and IECEx.

Our products are RoHS compliant: Restriction of Hazardous Substances (RoHS II 2011/65/EU).

压力单位转换表 / *Conversion table for pressure units*

单位缩写 Abbreviation of unit	测量单位 Unit of measurement	Pa = N/m2	bar	Torr	ibf/in2, PSI
1 Pa = N/m2	帕斯卡 Pascal	1	0.00001	0.0075	0.00014
1 bar	巴 Bar	100.000	1	750.062	14.5
1 Torr = 1 mm Hg	毫米汞柱 Millimeters of mercury	133.322	0.00133	1	0.01934
1 lbf/in2 = 1 PSI	每平方英寸磅力 Pound-force per square inch	6894	0.06894	51.71	1

温度单位换算表 / *Conversion table for temperature units*

	K	°C	F
K	1	K-273.15	9/5 K-459.67
°C	°C + 273.15	1	9/5 °C + 32
F	5/9 (F + 459.67)	5/9 (F-32)	1

代码转换表 - *Code conversion table*

代码 - *PART NUMBER*

电触点 - *electrical contact*												设定范围 / *Setting range* 巴 bar	20°C下的公差 / *Tolerance at 20°C* 巴 bar
常开 *norm. open*						常闭 *norm. closed*							
41	1	▲	●	■	0	41	2	▲	●	■	0	0.1 - 1	± 0.1
41	1	▲	●	■	A	41	2	▲	●	■	A	0.2 - 2	± 0.15
41	1	▲	●	■	1	41	2	▲	●	■	1	1 - 5	± 0.3
41	1	▲	●	■	2	41	2	▲	●	■	2	1 - 10	± 0.5
41	1	▲	●	■	3	41	2	▲	●	■	3	10 - 20	± 1.0
41	1	▲	●	■	4	41	2	▲	●	■	4	20 - 50 *	± 2.0

▲ 机体材料	*Material Case*
0 Acciaio Zincato	*0 Zinc plated steel case*
1 Ottone	*1 Brass*
2 Acciaio Inox AISI 316 *	*2 Stainless steel AISI 316 **
5 Acciaio Inox AISI 303 *	*5 Stainless steel AISI 303 **
* Standard G1/4" cilindrico	** Standard G1/4" cylindrical*

● 螺纹 (X3)	*Threads (X3)*	L1	L2 (mm)
1 1/8" Gas conico	*1 1/8" Gas conical*	10	51
2 1/4" Gas conico	*2 1/4" Gas conical*	12	53
3 M10x1K conico	*3 M10x1K conical*	10	51
4 M12x1,5 Cilindrico	*4 M12x1,5 cylindrical*	9	50
5 1/8" NPT	*5 1/8" NPT*	10	51
6 1/4" Gas cilindrico	*6 1/4" Gas cylindrical*	9,7	50,7
8 M10x1 cilindrico	*8 M10x1 cylindrical*	9,5	50,5

■ 膜片 (vedi pag. 14)	*Diaphragms (see page 14)*
1 NBR	*1 NBR*
2 FKM (standard)	*2 FKM (standard)*
3 EPDM CH	*3 EPDM CH*
4 CR	*4 CR*
5 Silicone	*5 Sylicon*
6 HNBR	*6 HNBR*

设定范围 / *setting range*

插入膜片代码，参见第 14 页 / *insert diaphragm code, see page 14*

插入螺纹代码 / *insert thread code*

机体材料 / *case material*

电触点 / *electrical contact*

型号 / *model*

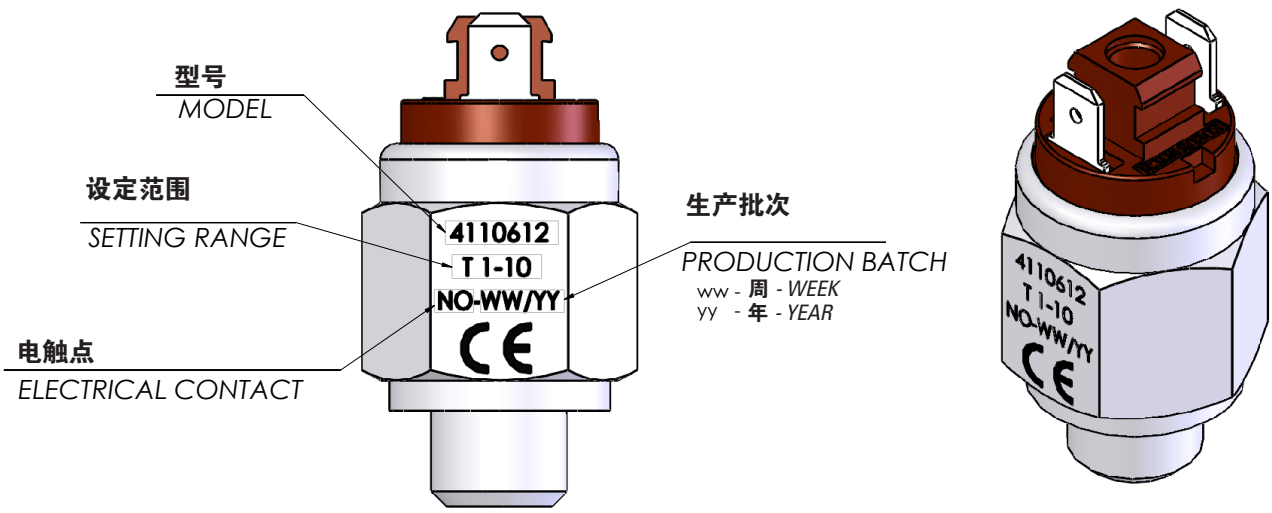

膜片 / 密封件选择指南
Guide to selecting the diaphragm/seal

膜片 / 密封材料代码 - *Diaphragm/seal material code*

		根据 ASTM-D 1418/94 - *According to ASTM-D 1418/94*
1	NBR	共聚物丁二烯丙烯腈 - copolymer butadiene acrylonitrile
2	FKM - VITON®	聚亚甲基氟橡胶 - fluoro rubber of the polymethylene
3	EPDM CH	三元乙丙橡胶 - terpolymer ethylene propylene
4	CR - NEOPRENE	聚合物氯丁二烯 - polymer chloroprene
5	MVQ	硅橡胶 - sylicon
6	HNBR	氢化丁腈橡胶 - copolymer butadiene acrylonitrile Hidrogenated

根据待控制的工作流体和温度选择膜片 / 密封材料表

Table for selecting the diaphragm/seal material according to the operating fluid to be controlled and the temperature.

	NBR	FKM	EPDM CH	CR	MVQ	HNBR
氨 / *nitrogen*	•	•	•	•	•	•
GLP / 丁烷 / 丙烷 / 甲烷 / *GLP /butane/propane/methane*	•	•	锘 no	锘 no	锘 no	•
二氧化碳 / *carbon dioxyde*	•	•	锘 no	锘 no	锘 no	•
金属 / *alkalis*	锘 no	锘 no	•	锘 no	锘 no	锘 no
制动液 / *brake fluid*	锘 no	锘 no	•	锘 no	锘 no	锘 no
氨 / *ammonia*	锘 no	锘 no	•	锘 no	锘 no	锘 no
水 / *water*	•	•	•	•	•	•
空气 / *air*	•	•	•	•	•	•
矿物液压油 / *mineral hydraulic oil*	•	•	锘 no	锘 no	锘 no	•
机油 / *motor oil*	•	•	锘 no	锘 no	锘 no	•
柴油 / *diesel fuel*	锘 no	•	锘 no	锘 no	锘 no	•
石脑油 / *naphta*	•	•	锘 no	锘 no	锘 no	•
汽油 / *petrol*	锘 no	•	锘 no	锘 no	锘 no	锘 no
碳氢化合物 / *hydrocarbons CnHn*	锘 no	•	锘 no	锘 no	锘 no	•
卤化溶剂 / *halogenated solvent*	锘 no	•	锘 no	锘 no	锘 no	锘 no
乙二醇 / *ethylene glycol*	•	锘 no	•	•	•	•
硅酮 / *silicone*	•	•	•	•	锘 no	锘 no
酮 / *ketone*	锘 no	锘 no	•	锘 no	锘 no	锘 no
最高工作温度 °C / *max operating temperature °C*	100	120	120	80	120	120
最低工作温度 °C / *min operating temperature °C*	-25	-10	-25	-20	-40	-30

本指南为通用指示。如需特殊用途，请联系我司技术办。
Thos guide provides general indication. For special applications, please contact our technical office.

集成连接器
Protection cap and connectors

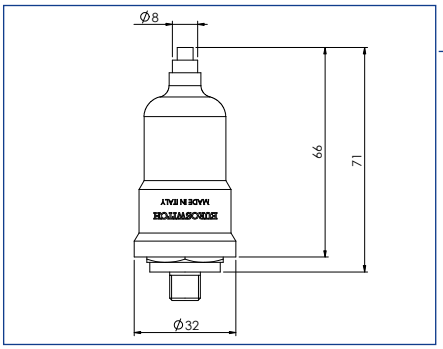

橡胶保护盖
Rubber protective cup

IP54 IP65
代码 cod. 3015001 (Ch. 24 mm)
型号.
Per/for MOD. 30-30V-31-31V-35-35V-37-37V-40-40V -41-41V
41BC-42-506-700-42V-80

IP54 IP65
代码 cod. 3015010 (Ch. 27 mm)
型号.
Per/for MOD. 27N-28N-357-377

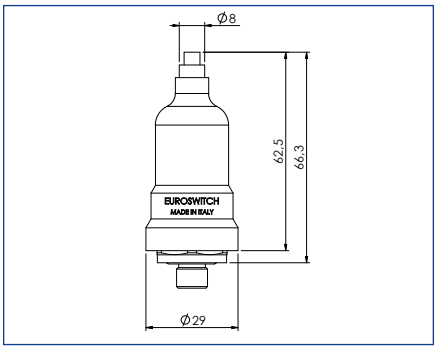

橡胶保护盖
Rubber protective cup

IP54
代码 cod. 3015200 (Ch. 22 mm)

型号.
Per/for MOD. 25R-25D-26

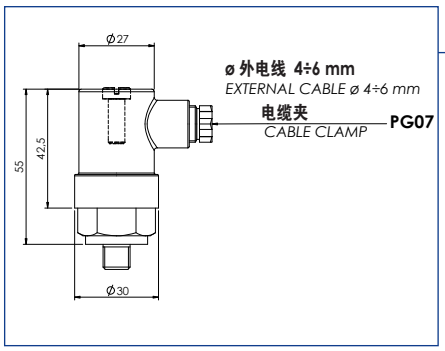

塑料保护盖
Plastic protective cup

IP65
代码 cod. 3900001

型号.
Per/for MOD. 30-30V-31-31V-35-35V-37-37V-40-40V
41-41V-41BC-42-42V-80-506-700

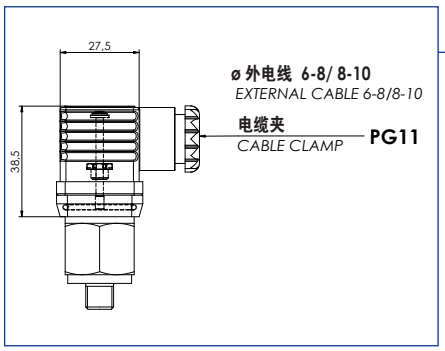

安全连接器
Protective connector

IP65
代码 cod. 3900200

DIN EN 175301-803-A (DIN 43650)

型号.
Per/for MOD. 30-31-32-35-37-40-41
41BC-42-80-506-700

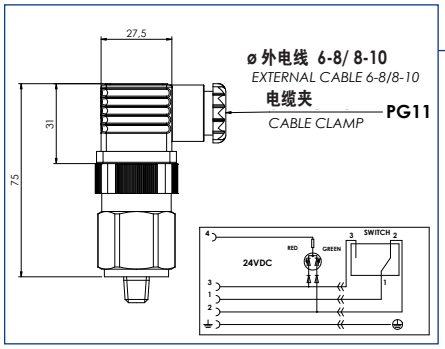

带LED的安全连接器（红 / 绿)
Protective connector with LED indicator (Red/Green)

IP65
cod. CNN084-002

DIN EN 175301-803-A (DIN 43650)

型号.
Per/for MOD. 38-46-48-49-81 387-691-692-507

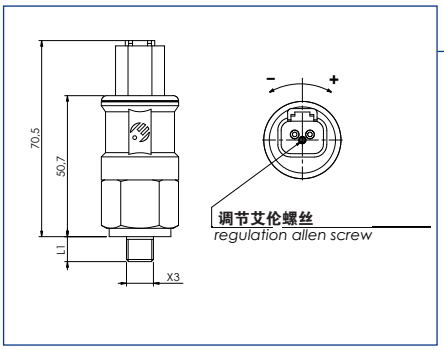

Deutsch DT 04-2P 连接器
Connector Deutsch DT04-2P

IP67 / IP69K

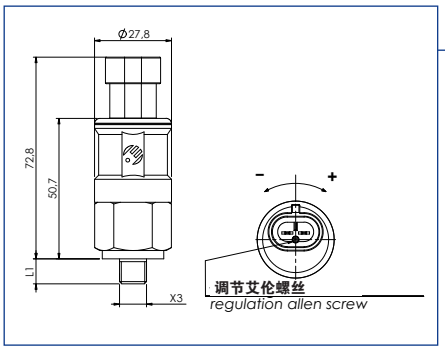

AMP类型Superseal 1.5 2路连接器
Connector AMP Superseal 1.5 2 way

IP67 / IP69K

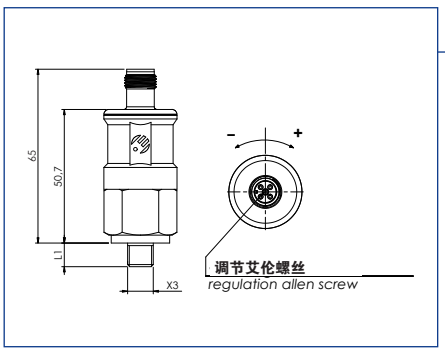

M12x1 连接器
Connector type M12 x 1

IP67

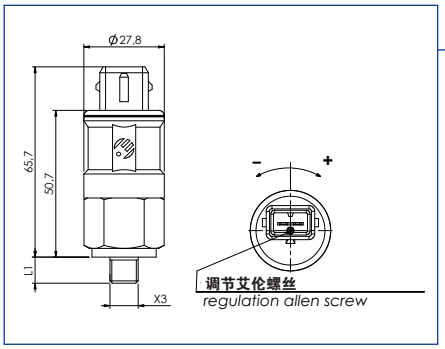

AMP类型
Junior Power Timer（电源定时器）连接器
Connector type AMP
Junior power timer

IP65

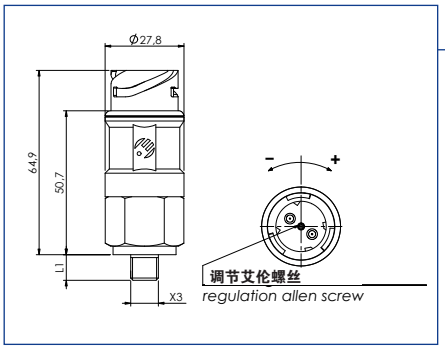

Bajonet DIN72585 连接器
Bajonet connector DIN72585

IP67 / IP69K

根据要求提供带接线版本的连接器

Ready wired versions with wires and connector on request

可提供连接器

AVAILABLE CONNECTIONS EXAMPLE

具有诊断能力的压力开关和压差指示器
Pressure switches and differential indicators with diagnostic capability

所有应用领域（农机、挖掘机、商用车、液压、过滤等）的安全标准不断提高，因此也提高了对压力开关和压差指示器等部件的要求。连接中的车载电子设备必须能够识别连接电缆中有故障或损坏的连接器、短路和中断。通过在开关中安装电阻器获得诊断能力。电阻器是集成的，因此开关保持符合所需的 IP 等级，不需要额外空间增加诊断能力。
可用于带有集成或有线连接器版本的选项。

The ever-increasing safety standards required in all application sectors (agricultural machinery, excavators, commercial vehicles, hydraulics, filtration, etc.) have consequently increased the requirements also for components, such as pressure switches and differential pressure indicators. Faulty or damaged connectors, short circuits and interruptions in the connection cables must be recognizable by the connected on-board electronics. The diagnostic capacity is obtained by installing resistors in the switch.The resistors are integrated, so that the switches remain compliant with the required IP degree and that no additional space is required for the added diagnostic capability.
Option available for versions with integrated or wired connectors.

车载诊断电路
ON BOARD DIAGNOSTIC CIRCUIT

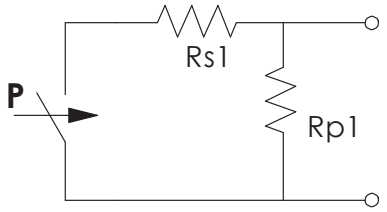

断线检测电路
LINE BREAK DETECTION CIRCUIT

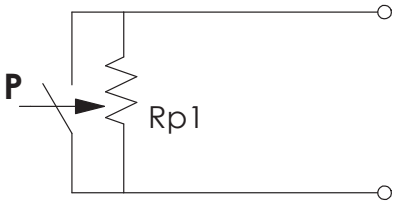

其他可能需要的补充功能

Others possible supplementary functions on request

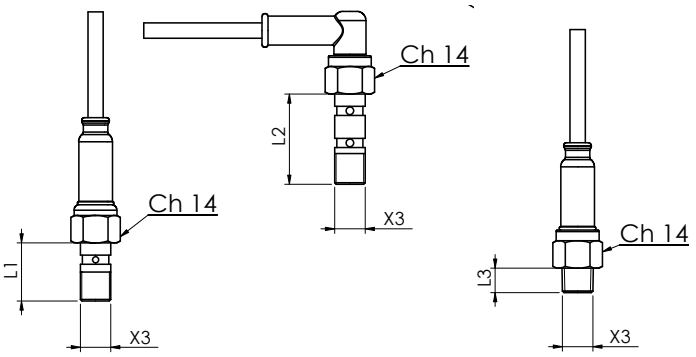

螺纹 (X3)	*Threads (X3)*	L1	L2	L3 (mm)
M8x1	*M8x1*	16,8	-	-
M10x1	*M10x1*	19	29,5	8
M10x1,25	*M10x1,25*	21	31,5	-
1/8" Gas 圆锥	*1/8" Gas conical*	-	-	8
1/8" NPT	*1/8" NPT*	-	-	8
3/8"-24 UNF-2A	*3/8" -24 UNF-2A*	24	-	-
7/16"-24 UNS-2A	*7/16" -24 UNS-2A*	24	-	-

机体	镀锌钢（按要求使用不锈钢）
电触点	镀银
触点	常开（按要求常闭）
最大开关电压	24 Vcc
电阻负载	21 (12 Vdc) VA
液体最高温度	80°C
超压极限	350 巴
干预点	2.5 - 5.5 巴　0.5 - 3.5 巴
启动条件	1B
膜片	EPDM CH（制动液）、NBR（液压油）
电气连接	按要求接线

Case	Zinc plated steel (stainless steel on request)
Electric contact	Silver Plated
Contact	NO (on request N.C.)
Max switched voltage	24 Vcc
Resistive load	21 (12 Vdc)VA
Max fluid temperature	80°C
Overpressure limit	350 bar
Intervention point	2.5 - 5.5bar　0.5 - 3.5 bar
Action type	1B
Diaphragm	EPDM CH (brake liquid), NBR (Idraulic oil)
Electrical connections	Wired on request

按要求 / *ON REQUEST*

电路 **OBD** 车载诊断　**CIRCUITO OBD** ON BOARD DIAGNOSTIC

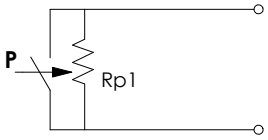

摩托车和娱乐车辆所要求的安全标准越来越高，因此增加了对其部件，例如制动开关的需求。
车载电子设备必须能够识别连接电缆中有故障或损坏的连接器、短路和中断。这种诊断能力是通过在制动开关中安装电阻器获得的。
电阻器集成到外壳中，因此开关保持 IP 兼容，不需要额外的诊断空间。

The ever higher safety standards required for motorcycles and recreational vehicles have consequently increased the demands on their components, such as brake switches.
Faulty or damaged connectors, short circuits and interruptions in the connection cables must be recognizable by the on-board electronics. This diagnostic capability is obtained by installing a resistor in the brake switch.
The resistors are integrated into the housing, so the switches remain IP-compliant and no additional diagnostic space is required.

请联系我司客户服务部门获得更多可用版本的信息。

Please contact our Customer service for further information on the versions available.

请参阅Euroswitch20-03-1压力开关目录册，第11-15页的一般说明，以便正确使用。*For a correct use please refer to "General Notes" in the pressure switches Euroswitch catalogue 20-03-1, p. 11-15.*

本公司保留随时修改产品技术特征或停止生产的权利，恕不另行通知。*The Company reserves the right to modify the technical features of the products or halt production at any time without notice.*

压力开关 – SPDT 触点
PRESSURE SWITCH WITH SPDT CONTACTS

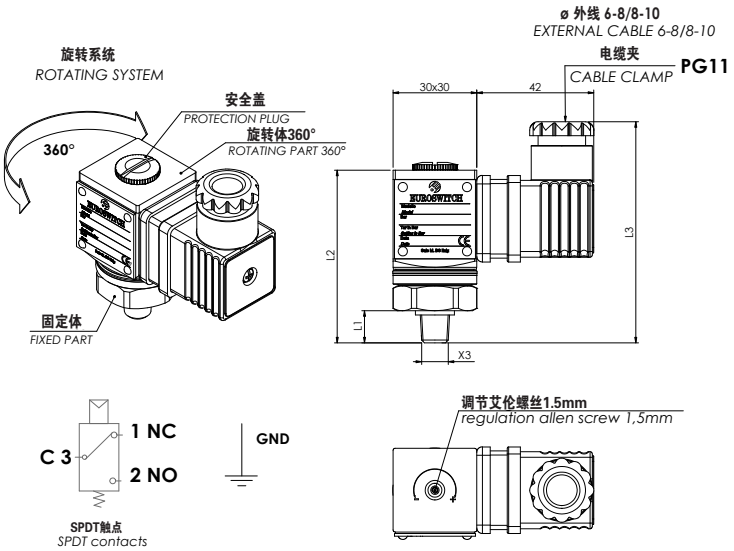

	代码 - *PART NUMBER*	设定范围 / *Setting range* 巴 bar	20°C下的公差 / *Tolerance at 20°C* 巴 bar
膜片 *diaphragm*	24 0 ▲ ● ■ 1	0.3 - 5	± 0.15
	24 0 ▲ ● ■ 2	1 - 10	± 0.5
	24 0 ▲ ● ■ 3	10 - 25	± 1
	24 0 ▲ ● ■ 4	25 - 80	± 2,5
活塞 *piston*	24 0 ▲ ● 1 5	50 - 200	± 2÷10
	24 0 ▲ ● 1 6	100 - 400	± 3÷15

▲ 机体材料 螺纹连接	*Case Material Thread connection*
0 镀锌钢体	*0 Zinc plated steel case*
2 AISI 316 *不锈钢	*2 Stainless steel AISI 316 **

● 螺纹 (X3)	*Threads (X3)*	L1	L2	L3 (mm)
1 1/8" Gas 圆锥	*1 1/8" Gas conical*	10	62	80
2 1/4" Gas 圆锥	*2 1/4" Gas conical*	12	64	82
6 1/4" Gas 圆柱	*6 1/4" Gas cylindrical*	10	62	80
G 1/8" Gas 圆柱	*G 1/8" Gas cylindrical*	10	62	80
* 标准G 1/4" 圆柱	** Standard G1/4" cylindrical*			

■ 膜片（见17页）	*Diaphragms (see page 17)*
1 NBR	*1 NBR*
2 FKM (标准)	*2 FKM (standard)*
3 EPDM CH	*3 EPDM CH*
4 CR	*4 CR*
5 硅酮	*5 Sylicon*
6 HNBR	*6 HNBR*

旋转体	阳极氧化铝
电气特性	5 (4) A / 14 Vdc
	4 (3) A / 30 Vdc
	5 (3) A / 125 Vac
	3 (2) A / 250 Vac
液体最高温度	80°至120°C，根据膜片
启动条件	1B
机械工作寿命	10^6 膜片版本 10^5 活塞版本
最大超压限制	膜片300巴 活塞800巴
最大工作压力	膜片150巴 活賽450巴
防护等级	IP65
根据 UNI EN 175301-803 (DIN43650) 带连接器	
固定迟滞	~ 10÷设定值的 30%
固定迟滞活塞	~ 10÷设定值的 40%
重量	~ 190 g

Rotating case	Anodized aluminium
Electrical characteristics	5 (4) A / 14 Vdc
	4 (3) A / 30 Vdc
	5 (3) A / 125 Vac
	3 (2) A / 250 Vac
Max fluid temperature	80° to 120°C depending on diaphragm
Action type	1B
Mechanical working life	10^6 diaphragm version 10^5 piston version
Max overpressure limit	diaphragm 300 bar piston 800 bar
Max working pressure	diaphragm 150 bar piston 450 bar
Protection degree	IP65
with connector according to UNI EN 175301-803 (DIN43650)	
Fixed Hysteresis diaphragm	~ 10÷30% of setting value
Fixed Hysteresis piston	~ 10÷40% of setting value
Weight	~ 190 g

请参阅Euroswitch20-03-1压力开关目录册，第11-15页的一般说明，以便正确使用。*For a correct use please refer to "General Notes" in the pressure switches Euroswitch catalogue 20-03-1, p. 11-15.*

本公司保留随时修改产品技术特征或停止生产的权利，恕不另行通知。*The Company reserves the right to modify the technical features of the products or halt production at any time without notice.*

24C

压力开关 - SPDT 触点
PRESSURE SWITCH WITH SPDT CONTACTS

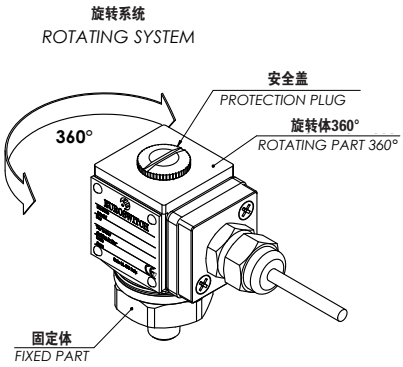

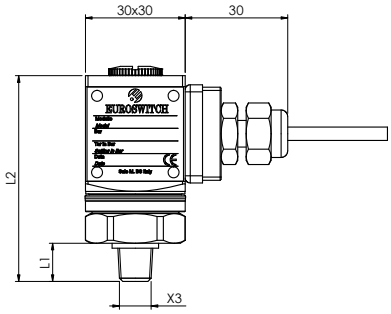

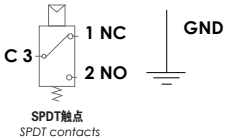

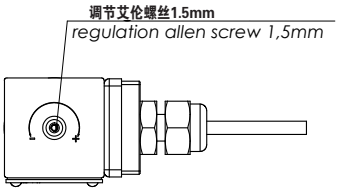

	代码 - *PART NUMBER*	设定范围 / *Setting range* 巴 bar	20°C下的公差 / *Tolerance at 20°C* 巴 bar
膜片 *diaphragm*	24C 0 ▲ ● ■ 1	0.3 - 5	± 0.15
	24C 0 ▲ ● ■ 2	1 - 10	± 0.5
	24C 0 ▲ ● ■ 3	10 - 25	± 1
	24C 0 ▲ ● ■ 4	25 - 80	± 2,5
活塞 *piston*	24C 0 ▲ ● 1 5	50 - 200	± 2÷10
	24C 0 ▲ ● 1 6	100 - 400	± 3÷15

▲ 活塞 螺纹连接 / ***Case Material Thread connection***

0 镀锌钢体	***0*** *Zinc plated steel case*
2 AISI 316 *不锈钢	***2*** *Stainless steel AISI 316 **

● 螺纹 (X3) / ***Threads (X3)***

			L1	L2	L3 (mm)
1 1/8" Gas 圆锥	***1*** *1/8" Gas conical*		10	62	80
2 1/4" Gas 圆锥	***2*** *1/4" Gas conical*		12	64	82
6 1/4" Gas 圆柱	***6*** *1/4" Gas cylindrical*		10	62	80
G 1/8" Gas 圆柱	***G*** *1/8" Gas cylindrical*		10	62	80

* 标准G 1/4" 圆柱 / ** Standard G1/4" cylindrical*

■ 膜片 / ***Diaphragms***

（见17页）	*(see page 17)*
1 NBR	***1*** *NBR*
2 FKM (标准)	***2*** *FKM (standard)*
3 EPDM CH	***3*** *EPDM CH*
4 CR	***4*** *CR*
5 硅酮	***5*** *Sylicon*
6 HNBR	***6*** *HNBR*

旋转体	阳极氧化铝
电气特性	5 (4) A / 14 Vdc
	4 (3) A / 30 Vdc
	5 (3) A / 125 Vac
	3 (2) A / 250 Vac
液体最高温度	80°至120°C，根据膜片
启动条件	1B
机械工作寿命	10^6 膜片版本 10^5 活塞版本
最大超压限制	膜片300巴 活塞800巴
最大工作压力	膜片150巴 活賽450巴
防护等级	IP65
电气连接	按要求提供电线
固定迟滞	~ 10÷设定值的 30%
固定迟滞活塞	~ 10÷设定值的 40%
重量	~ 190 g

Rotating case	Anodized aluminium
Electrical characteristics	5 (4) A / 14 Vdc
	4 (3) A / 30 Vdc
	5 (3) A / 125 Vac
	3 (2) A / 250 Vac
Max fluid temperature	80° to 120°C depending on diaphragm
Action type	1B
Mechanical working life	10^6 diaphragm version 10^5 piston version
Max overpressure limit	diaphragm 300 bar piston 800 bar
Max working pressure	diaphragm 150 bar piston 450 bar
Protection degree	IP65
Electrical connection	cable on request
Fixed Hysteresis diaphragm	~ 10÷30% of setting value
Fixed Hysteresis piston	~ 10÷40% of setting value
Weight	~ 190 g

请参阅Euroswitch20-03-1压力开关目录册，第11-15页的一般说明，以便正确使用。*For a correct use please refer to "General Notes" in the pressure switches Euroswitch catalogue 20-03-1, p. 11-15.*
本公司保留随时修改产品技术特征或停止生产的权利，恕不另行通知。*The Company reserves the right to modify the technical features of the products or halt production at any time without notice.*

压力开关 - SPDT 触点 - 内螺纹
PRESSURE SWITCH WITH SPDT CONTACTS - FEMALE THREAD

24F

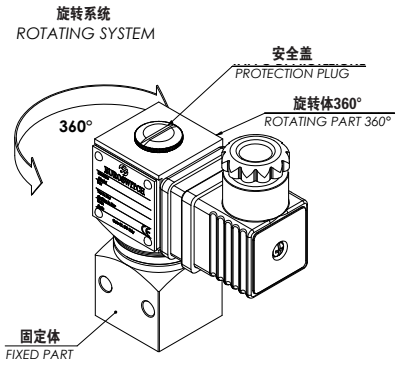

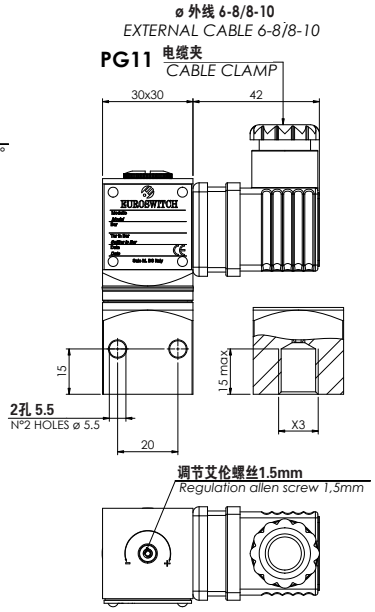

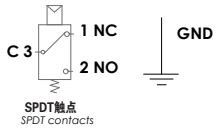

	代码 - *PART NUMBER*	设定范围 / *Setting range* 巴 bar	20°C下的公差 / *Tolerance at 20°C* 巴 bar
膜片 *diaphragm*	24F 0 ▲ ● ■ 1	0.3 - 5	± 0.15
	24F 0 ▲ ● ■ 2	1 - 10	± 0.5
	24F 0 ▲ ● ■ 3	10 - 25	± 1
	24F 0 ▲ ● ■ 4	25 - 80	± 2,5
活塞 *piston*	24F 0 ▲ ● 1 5	50 - 200	± 2÷10
	24F 0 ▲ ● 1 6	100 - 400	± 3÷15

▲ 活塞 螺纹连接	*Case Material Thread connection*
0 镀锌钢体	*0 Zinc plated steel case*
2 AISI 316 *不锈钢	*2 Stainless steel AISI 316 **

● 螺纹 (X3)	*Threads (X3)*
6 1/4" Gas 圆柱	*6 1/4" Gas cylindrical*
G 1/8" Gas 圆柱	*G 1/8" Gas cylindrical*
* 标准G 1/4" 圆柱	** Standard G1/4" cylindrical*

■ 膜片（见17页）	*Diaphragms (see page 17)*
1 NBR	*1 NBR*
2 FKM (标准)	*2 FKM (standard)*
3 EPDM CH	*3 EPDM CH*
4 CR	*4 CR*
5 硅酮	*5 Sylicon*
6 HNBR	*6 HNBR*

旋转体	阳极氧化铝
电气特性	5 (4) A / 14 Vdc
	4 (3) A / 30 Vdc
	5 (3) A / 125 Vac
	3 (2) A / 250 Vac
液体最高温度	80°至120°C，根据膜片
液体最高温度	80°至120°C，根据膜片
启动条件	1B
最大超压限制	膜片300巴 活塞800巴
最大工作压力	膜片150巴 活賽450巴
防护等级	IP65
根据 UNI EN 175301-803 (DIN43650) 带连接器	
固定迟滞膜片	~ 10÷设定值的 30%
固定迟滞活塞	~ 10÷设定值的 40%
重量	~ 265 g

Rotating case	Anodized aluminium
Electrical characteristics	5 (4) A / 14 Vdc
	4 (3) A / 30 Vdc
	5 (3) A / 125 Vac
	3 (2) A / 250 Vac
Max fluid temperature	80° to 120°C depending on diaphragm
Action type	1B
Mechanical working life	10^6 diaphragm version 10^5 piston version
Max overpressure limit	diaphragm 300 bar piston 800 bar
Max working pressure	diaphragm 150 bar piston 450 bar
Protection degree	IP65
with connector according to UNI EN 175301-803 (DIN43650)	
Fixed Hysteresis diaphragm	~ 10÷30% of setting value
Fixed Hysteresis piston	~ 10÷40% of setting value
Weight	~ 265 g

请参阅Euroswitch20-03-1压力开关目录册，第11-15页的一般说明，以便正确使用。*For a correct use please refer to "General Notes" in the pressure switches Euroswitch catalogue 20-03-1, p. 11-15.*

本公司保留随时修改产品技术特征或停止生产的权利，恕不另行通知。*The Company reserves the right to modify the technical features of the products or halt production at any time without notice.*

25R

微型压力开关
SMALL PRESSURE SWITCH

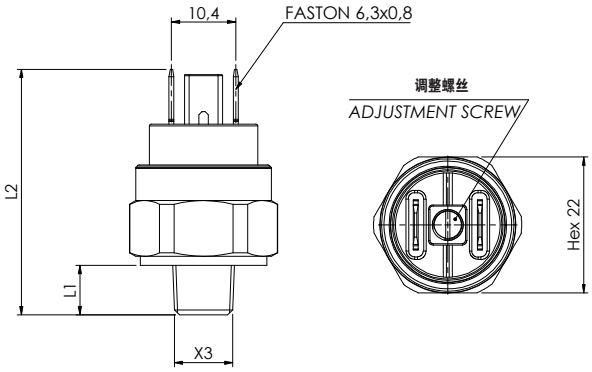

代码 - *PART NUMBER*

型号 / Mod. 25R			
电触点 - *electrical contact* 常开 *norm. open*	电触点 - *electrical contact* 常闭 *norm. closed*	设定范围 *Setting range* 巴 bar	20°C下的公差 *Tolerance at 20°C* 巴 bar
25R 1 1 ● ■ 0	**25R** 2 1 ● ■ 0	0,5 - 3,5	± 0,3
25R 1 1 ● ■ 2	**25R** 2 1 ● ■ 2	4 ÷ 10	± 0,4

● 螺纹 (X3)	*Threads (X3)*	L1	L2 (mm)
1 1/8" Gas 圆锥	***1*** *1/8" Gas conical*	8	40
2 1/4" Gas 圆锥	***2*** *1/4" Gas conical*	10	42

■ 膜片（见17页）	*Diaphragm (see page 17)*
1 NBR	***1*** *NBR*
3 EPDM CH	***3*** *EPDM CH*
6 HNBR	***6*** *HNBR*

机体	黄铜 (按要求可提供其他材料)
电触点	镀银
电流状态	常开（灰色）常闭（黑色）
最大开关电压	48 V
最大开关电流	0,5 A
液体最高温度	80° C
机械工作寿命	10^5 活塞版本
电气工作寿命	10^5 活塞版本
最大超压限制	50 巴
最大工作压力	20 巴
启动条件	1B
防护等级	IP 00
带保护盖 3015200	IP 54（见 18-20页）
重量	~ 50 g

Case	Brass (other materials on request)
Electric contacts	Silver plated
Electric conditions	N.O. (Grey) N.C. (Black)
Max switched voltage	48 V
Max switched current	0,5 A
Max fluid temperature	80° C
Mechanical working life	10^5 operations
Electrical life	10^5 operations
Max Overpressure limit	50 bar
Max Working pressure	20 bar
Action type	1B
Protection degree	IP 00
with cover 3015200	IP 54 (see pages 18-20)
Weight	~ 50 g

有关其他版本的更多信息请联系Euroswitch 公司

Please contact Euroswitch for further information on the versions available

请参阅Euroswitch20-03-1压力开关目录册，第11-15页的一般说明，以便正确使用。*For a correct use please refer to "General Notes" in the pressure switches Euroswitch catalogue 20-03-1, p. 11-15.*

本公司保留随时修改产品技术特征或停止生产的权利，恕不另行通知。*The Company reserves the right to modify the technical features of the products or halt production at any time without notice.*

微型压力开关快速动作
SMALL PRESSURE SWITCH SNAP ACTION

25D

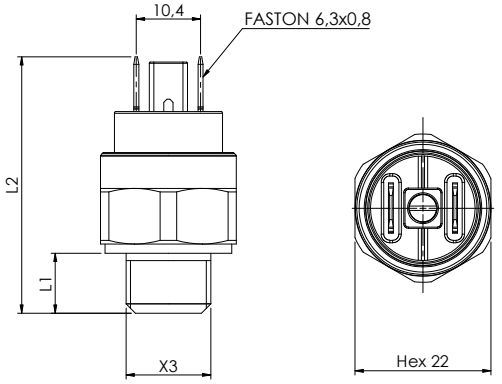

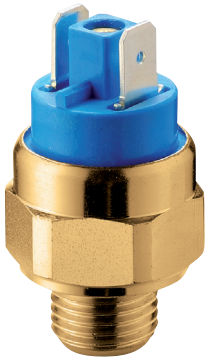

代码 - *PART NUMBER*

型号 / Mod. 25D			
电触点 - *electrical contact* 常开 *norm. open*	电触点 - *electrical contact* 常闭 *norm. closed*	设置和重置值可在Euroswitch公司调整 *Setting and resetting values adjustable in Euroswitch*	20°C下的公差 *Tolerance at 20°C* 巴 bar
25D 1 1 ● ■ 0	**25D** 2 1 ● ■ 0	1 - 4	± 0,2
25D 1 1 ● ■ 1	**25D** 2 1 ● ■ 1	3 - 6	± 0,3

● **螺纹 (X3)**	***Threads (X3)***	**L1**	**L2 (mm)**
1 1/8" Gas 圆锥	***1*** *1/8" Gas conical*	8	40
2 1/4" Gas 圆锥	***2*** *1/4" Gas conical*	10	42
3 M10x1 圆锥	***3*** *M10x1 conical*	9	41

■ **膜片（见17页）**	***Diaphragm*** ***(see page 17)***
1 NBR	***1*** *NBR*
3 EPDM CH	***3*** *EPDM CH*
6 HNBR	***6*** *NBR*

机体	黄铜 (按要求可提供其他材料)
电触点	镀银
电流状态	常开（紫色）常闭（蓝色）
迟滞	Euroswitch公司设置
最大开关电压	12 V
最大开关电流	8 A
液体最高温度	80° C
设置和重置值可在Euroswitch公司调整	
机械工作寿命	10^5 活塞版本
电气工作寿命	10^5 活塞版本
最大超压限制	50 巴
最大工作压力	20 巴
启动条件	1B
防护等级	IP 00
带保护盖 3015200	IP 54（见 18-20页）
重量	~ 60 g

Case	Brass (other materials on request)
Electric contacts	Silver plated
Electric conditions	N.O. (Bordeaux) N.C. (Azure)
Hysteresis	Defined in Euroswitch
Max switched voltage	12 V
Max switched current	8 A
Max fluid temperature	80° C
Setting and resetting values on request (adjustable in Euroswitch)	
Mechanical working life	10^5 operations
Electrical working life	10^5 operations
Max Overpressure limit	50 bar
Max Working pressure	20 bar
Action type	1B
Protection degree	IP 00
with cover 3015200	IP 54 (see pages 18-20)
Weight	~ 60 g

有关其他版本的更多信息请联系Euroswitch 公司

Please contact Euroswitch for further information on the versions available

请参阅Euroswitch20-03-1压力开关目录册，第11-15页的一般说明，以便正确使用。*For a correct use please refer to "General Notes" in the pressure switches Euroswitch catalogue 20-03-1, p. 11-15.*

本公司保留随时修改产品技术特征或停止生产的权利，恕不另行通知。*The Company reserves the right to modify the technical features of the products or halt production at any time without notice.*

26-266

固定设定压力开关
FIXED SETTING PRESSURE SWITCH

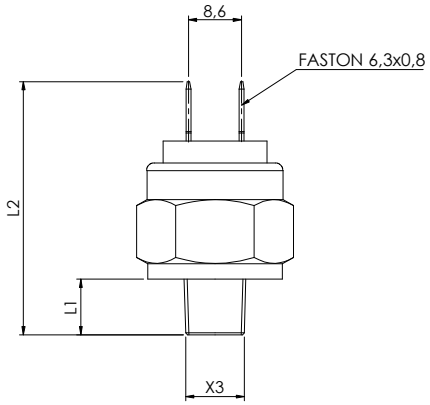

26

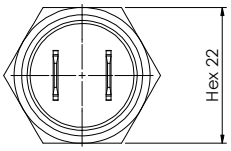

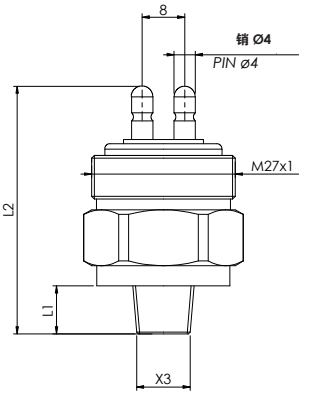

266

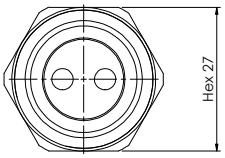

代码 - *PART NUMBER*

型号 / Mod. 26 - 型号/ Mod. 266		操作范围 *Operating range* bar
电触点 - *electrical contact* 常开 *norm. open*		
26 1 0 ● 1 0	**266** 0 ● 1 0	1 - 4
26 1 0 ● 1 1	**266** 0 ● 1 1	3 - 6

● **螺纹 (X3)**	***Threads (X3)***	型号 26 L1	型号 26 L2 (mm)	型号 266 L1	型号 266 L2 (mm)
1 1/8" Gas 圆锥	***1*** *1/8" Gas conical*	8	39	10	48
2 1/4" Gas 圆锥	***2*** *1/4" Gas conical*	10	41	12	50
3 M10x1 圆锥	***3*** *M10x1 conical*	9	40	9	47

■**膜片（见17页）**	***Diaphragm*** *(see page 17)*
1 NBR (标准)	***1*** *NBR (standard)*
2 FKM	***2*** *FKM*
3 EPDM CH	***3*** *EPDM CH*
6 HNBR	***6*** *HNBR*

机体	镀锌钢
电触点	镀银
电流状态	N.A.
最大开关电压	24 V
最大开关电流	2 A
液体最高温度	100° C
机械工作寿命	10^5 活塞版本（0-200 巴）
最大超压限制	400 巴
启动条件	1B
重量	型号 26 ~ 35 g 型号 266 ~ 70 g

Case	Zinc plated steel
Electric contacts	Silver plated
Electric condition	N.O.
Max switched voltage	24 V
Max switched current	2 A
Max fluid temperature	100° C
Mechanical working life	10^5 operations (0 - 200 bar)
Max overpressure limit	400 bar
Action type	1B
Weight	mod 26 ~ 35 g mod 266 ~ 70 g

Contattare Euroswitch per maggiori informazioni sulle versioni disponibili

Please contact Euroswitch for further information on the versions available

请参阅Euroswitch20-03-1压力开关目录册，第11-15页的一般说明，以便正确使用。*For a correct use please refer to "General Notes" in the pressure switches Euroswitch catalogue 20-03-1, p. 11-15.*

本公司保留随时修改产品技术特征或停止生产的权利，恕不另行通知。*The Company reserves the right to modify the technical features of the products or halt production at any time without notice.*

压力开关 – 可调迟滞 - SPDT 触点
PRESSURE SWITCH - ADJUSTABLE HYSTERESIS - SPDT CONTACTS

27N-28N

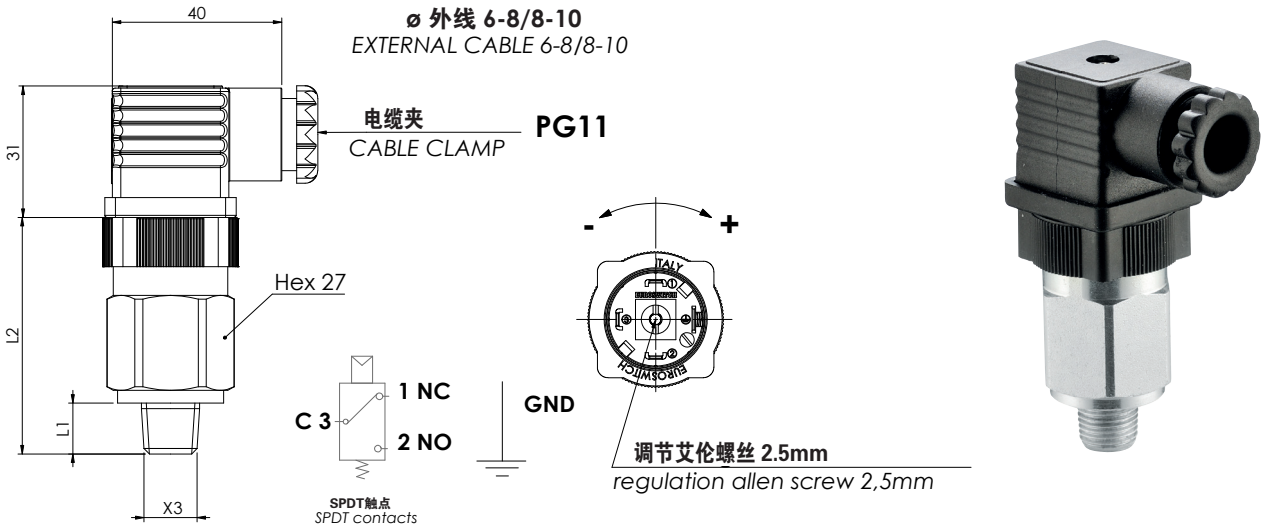

	代码 - *PART NUMBER*	设定范围 / *Setting range* 巴 bar	20°C下的公差 / *Tolerance at 20°C* 巴 bar
膜片 ***diaphragm***	**27N** 2 ▲ ● ■ 0	0.3 - 1.5	± 0.2
	27N 2 ▲ ● ■ 1	1 - 5	± 0.3
	27N 2 ▲ ● ■ 2	1 - 10	± 0.5
	27N 2 ▲ ● ■ 3	10 - 50 (1)	± 2
	27N 2 ▲ ● ■ 4	10 - 100 (1)	± 3
活塞 ***piston***	**28N** 2 ▲ ● 1 6	50 - 200	± 2÷10
	28N 2 ▲ ● 1 7	100 - 400	± 5÷15

(1) 只有钢版 - *Only version in stainless steel*

▲ 活塞	***Case Material***
0 镀锌钢体	***0*** *Zinc plated steel case*
1 黄铜	***1*** *Brass*
2 AISI 316 *不锈钢	***2*** *Stainless steel AISI 316 **
5 AISI 303 *不锈钢	***5*** *Stainless steel AISI 303 **
* 标准G 1/4" 圆柱	** Standard G1/4" cylindrical*

● 螺纹 (X3)	***Threads (X3)***	**L1** (mm)
1 1/8" Gas 圆锥	***1*** *1/8" Gas conical*	10
2 1/4" Gas 圆锥	***2*** *1/4" Gas conical*	12
3 M10x1K 圆锥	***3*** *M10x1K conical*	10
4 M12x1,5 圆柱	***4*** *M12x1,5 cylindrical*	9
5 1/8" NPT	***5*** *1/8" NPT*	9
6 1/4" Gas 圆柱	***6*** *1/4" Gas cylindrical*	12

■ 膜片（见17页）	***Diaphragms*** *(see page 17)*
1 NBR	***1*** *NBR*
2 FKM (标准)	***2*** *FKM (standard)*
3 EPDM CH	***3*** *EPDM CH*
4 CR	***4*** *CR*
5 硅酮	***5*** *Sylicon*
6 HNBR	***6*** *HNBR*

电触点	镀银
电流状态	SPDT触点
电气特性	4(2) A / 24 Vdc
	6(2) A / 250 Vac
液体最高温度	80°至120°C，根据膜片
机械工作寿命	10^6 活塞版本
最大超压限制	膜片 钢 300 巴 黄铜 80 巴 活塞 800 bar
最大工作压力	膜片 钢 150 巴 黄铜 40 巴 活塞 450 巴
启动条件	1B
防护等级	IP 65
根据 UNI EN 175301-803 (DIN43650) 带连接器	
迟滞	膜片 10 ÷ 50% regolabile in Euroswitch (standard 30%) 活塞 30 ÷ 50% regolabile in Euroswitch (standard 40%)
■ **密封（型号28N）**	NBR +铁氟龙（见 17页）
重量	膜片 ~ 130 g 活塞 ~ 140 g

Electric contacts	Silver
Electrical condition	SPDT (exchange contact)
Electrical characteristics	4(2) A / 24 Vdc
	6(2) A / 250 Vac
Max fluid temperature	80° to 120°C depending on diaphragm / seal
Mechanical working life	10^6 operations
Max overpressure limit	**diaphragm** steel 300 bar brass 80 bar **piston** 800 bar
Maxworking pressure	**diaphragm** steel 150 bar brass 40 bar **piston** 450 bar
Action type	1B
Protection degree	IP 65
with connector according to UNI EN 175301-803 (DIN43650)	
Hysteresis	**diaphragm** 10 ÷ 50% adjustable in Euroswitch (standard 30%) **piston** 30 ÷ 50% adjustable in Euroswitch (standard 40%)
■ **Seal (mod. 28N)**	NBR + Teflon (see page 17)
Weight	**diaphragm** ~ 130 g **piston** ~ 140 g

请参阅Euroswitch20-03-1压力开关目录册，第11-15页的一般说明，以便正确使用。*For a correct use please refer to "General Notes" in the pressure switches Euroswitch catalogue 20-03-1, p. 11-15.*

本公司保留随时修改产品技术特征或停止生产的权利，恕不另行通知。*The Company reserves the right to modify the technical features of the products or halt production at any time without notice.*

30-30V

活塞压力开关 ≤ 250V
PISTON PRESSURE SWITCH ≤ 250V

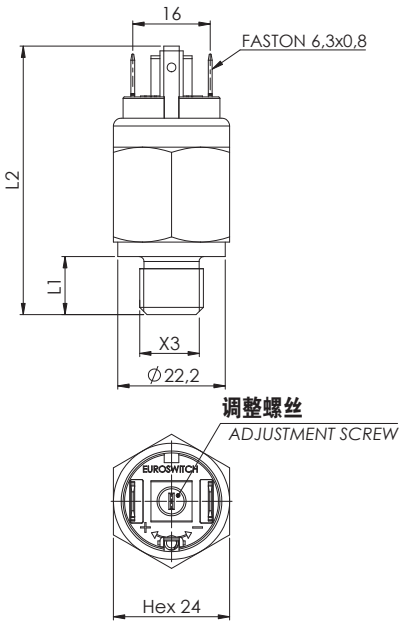

30

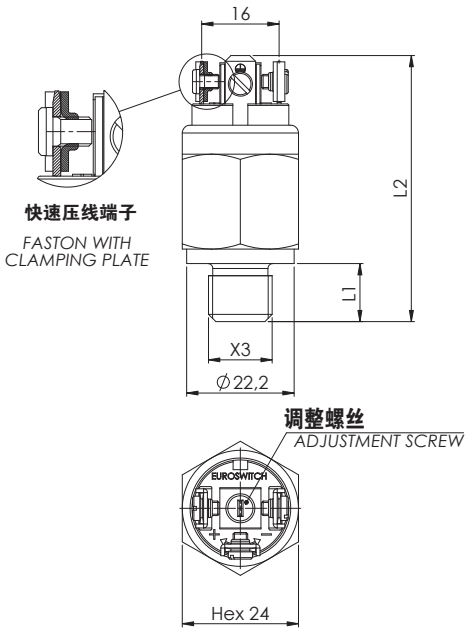

30V

代码 - *PART NUMBER*

电触点 - *electrical contact*												设定范围 / *Setting range* 巴 bar	20°C下的公差 / *Tolerance at 20°C* 巴 bar
常开 *norm. open*						常闭 *norm. closed*							
30(V)	1	▲	●	1	6	**30(V)**	2	▲	●	1	6	50 - 150	± 2 ÷ 10
30(V)	1	▲	●	1	7	**30(V)**	2	▲	●	1	7	100 - 300	± 5 ÷ 15

(V) = 快速压线端子 / *faston with clamping plate*

▲ 活塞	*Case Material*
0 镀锌钢体	***0*** *Zinc plated steel case*
2 AISI 316 *不锈钢	***2*** *Stainless steel AISI 316 **
5 AISI 303 *不锈钢	***5*** *Stainless steel AISI 303 **
* 标准G 1/4" 圆柱	** Standard G1/4" cylindrical*

● 螺纹 (X3)	*Threads (X3)*	L1	L2 (mm)
1 1/8" Gas 圆锥	***1*** *1/8" Gas conical*	10	52
2 1/4" Gas 圆锥	***2*** *1/4" Gas conical*	12	54
3 M10x1K 圆锥	***3*** *M10x1K conical*	12	54
H 1/4" Gas 圆柱	***H*** *1/4" Gas cylindrical*	12	54

电触点	镀银 AgNi（可要求镀金）
电流状态	常开（紫色）常闭（蓝色）
最大开关电压	250 V
最大开关电流	0.5 A
液体最高温度	100° C
机械工作寿命	10^5 活塞版本（10-300 巴）
电气工作寿命	10^5 活塞版本
最大超压限制	8 00 巴
最大工作压力	450 巴
启动条件	1B
防护等级	IP00（见 18-20页保护盖和连接器）
■ **密封**	NBR +铁氟龙（见 17页）
重量	~ 75 g

Electric contacts	Silver AgNi, (gold plated on request)
Electrical condition	N.O. (bordeaux) or N.C. (blue)
Max switched voltage	250 V
Max switched current	0.5 A
Max fluid temperature	100° C
Mechanical working life	10^5 operations (10-300 bar)
Electrical working life	10^5 operations
Max Overpressure limit	800 bar
Max Working pressure	450 bar
Action type	1B
Protection degree	IP 00 (see pages 18-20 for protection caps and connectors)
■ **Seal**	NBR+Teflon (see page 17)
Weight	~ 75 g

请参阅Euroswitch20-03-1压力开关目录册，第11-15页的一般说明，以便正确使用。*For a correct use please refer to "General Notes" in the pressure switches Euroswitch catalogue 20-03-1, p. 11-15.*
本公司保留随时修改产品技术特征或停止生产的权利，恕不另行通知。*The Company reserves the right to modify the technical features of the products or halt production at any time without notice.*

膜片压力开关 ≤ 250V
DIAPHRAGM PRESSURE SWITCH ≤ 250V

31-31V

可按要求提供认证版本 ATEX / IECEX
Version ATEX / IECEX available on request

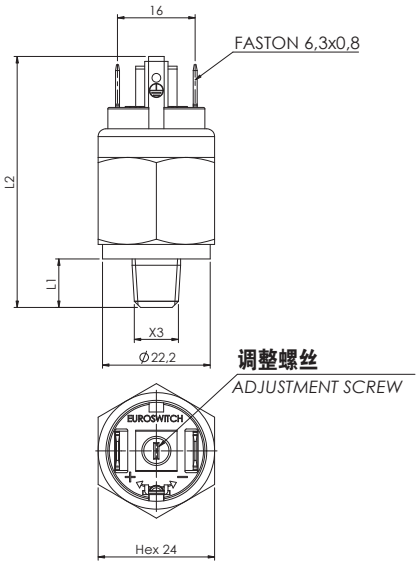

31

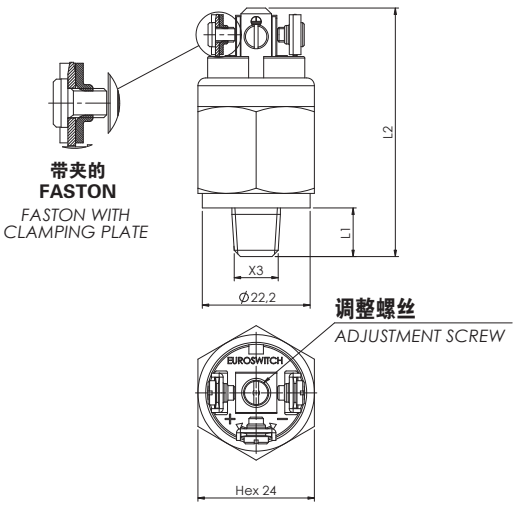

31V

代码 - *PART NUMBER*

电触点 - *electrical contact* 常开 *norm. open*					常闭 *norm. closed*					设定范围 / *Setting range* 巴 bar	20°C下的公差 / *Tolerance at 20°C* 巴 bar
31(V)	1	▲	●	■	0	**31(V)**	2	▲	●	■ 0	0.1 - 1	± 0.1
31(V)	1	▲	●	■	A	**31(V)**	2	▲	●	■ A	0.2 - 2	± 0.15
31(V)	1	▲	●	■	1	**31(V)**	2	▲	●	■ 1	1 - 5	± 0.3
31(V)	1	▲	●	■	2	**31(V)**	2	▲	●	■ 2	1 - 10	± 0.5
31(V)	1	▲	●	■	3	**31(V)**	2	▲	●	■ 3	10 - 20	± 1.0
31(V)	1	▲	●	■	4	**31(V)**	2	▲	●	■ 4	20 - 50 (1)	± 2.0

(1) 仅适用于镀锌本体 - *Available only with body Zinc plated or Stainless steel*

▲ 活塞	*Case Material*
0 镀锌钢体	***0*** *Zinc plated steel case*
1 黄铜	***1*** *Brass*
2 AISI 316 * 不锈钢	***2*** *Stainless steel AISI 316 **
5 AISI 303 * 不锈钢	***5*** *Stainless steel AISI 303 **
*标准G 1/4" 圆柱	** Standard G1/4" cylindrical*

● 螺纹 (X3)	**Threads (X3)**	**L1**	**L2** (mm)
1 1/8" Gas 圆锥	***1*** *1/8" Gas conical*	10	51
2 1/4" Gas 圆锥	***2*** *1/4" Gas conical*	12	53
3 M10x1K 圆锥	***3*** *M10x1K conical*	10	51
4 M12x1,5 圆柱	***4*** *M12x1,5 cylindrical*	9	50
5 1/8" NPT	***5*** *1/8" NPT*	10	51
6 1/4" Gas 圆柱	***6*** *1/4" Gas cylindrical*	9,7	50,7
8 M10x1 圆柱	***8*** *M10x1 cylindrical*	9,5	50,5
G 1/8" Gas 圆柱	***G*** *1/8" Gas cylindrical*	10	51

■ 膜片（见17页）	***Diaphragms*** (see page 17)
1 NBR	***1*** *NBR*
2 FKM (标准)	***2*** *FKM (standard)*
3 EPDM CH	***3*** *EPDM CH*
4 CR	***4*** *CR*
5 硅酮	***5*** *Sylicon*
6 HNBR	***6*** *HNBR*

电触点	镀银 AgNi（可要求镀金）
电流状态	常开（紫色）常闭（蓝色
最大开关电压	250 V
最大开关电流	0,5 A
液体最高温度	80°至120°C（根据膜片）
机械工作寿命	10^6 活塞版本
电气工作寿命	10^5 活塞版本
最大超压限制	镀锌钢 / 不锈钢 300 巴 黄铜 80 巴
最大工作压力	镀锌钢 / 不锈钢 150 巴 黄铜 40 巴
启动条件	1B
防护等级	IP00（见 18-20页保护盖和连接器）
重量	~ 65 g

Electric contacts	Silver AgNi, (gold plated on request)
Electrical conditions	N.O. (bordeaux) N.C. (blu)
Max switches voltage	250 V
Max switches current	0,5 A
Max fluid temperature	80° to 120°C (depending on diaphragm)
Mechanical working life	10^6 operations
Electrical working life	10^5 operations
Max Overpressure limit	Zinc plated steel / Stainless steel 300 bar Brass 80 bar
Max Working pressure	Zinc plated steel / Stainless steel 150 bar Brass 40 bar
Action type	1B
Protection degree	IP 00 (see pages 18-20 for protection caps and connectors)
Weight	~65 g

请参阅Euroswitch20-03-1压力开关目录册，第11-15页的一般说明，以便正确使用。*For a correct use please refer to "General Notes" in the pressure switches Euroswitch catalogue 20-03-1, p. 11-15.*
本公司保留随时修改产品技术特征或停止生产的权利，恕不另行通知。*The Company reserves the right to modify the technical features of the products or halt production at any time without notice.*

40-40V

活塞压力开关 ≤ 48V
PISTON PRESSURE SWITCH ≤ 48V

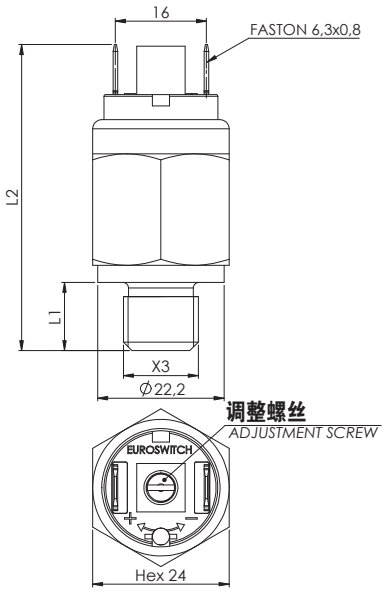

40

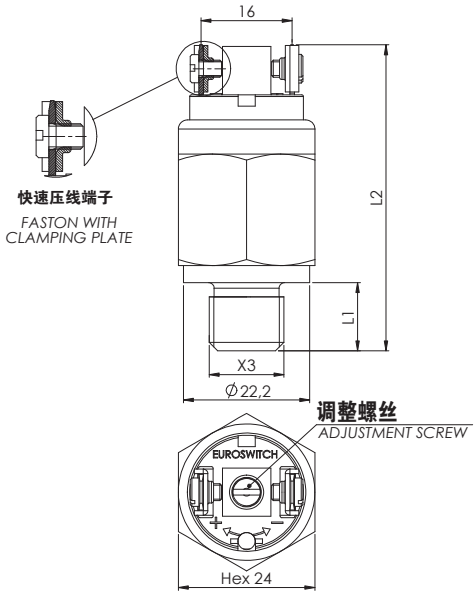

40V

代码 - *PART NUMBER*

电触点 - *electrical contact*												设定范围 / *Setting range* 巴 bar	20°C下的公差 / *Tolerance at 20°C* 巴 bar
常开 *norm. open*						常闭 *norm. closed*							
40(V)	1	▲	●	1	6	**40(V)**	2	▲	●	1	6	50 - 150	± 2 ÷ 10
40(V)	1	▲	●	1	7	**40(V)**	2	▲	●	1	7	100 - 300	± 5 ÷ 15

(V) =快速压线端子 / *faston with clamping plate*

▲ 活塞	*Case Material*
0 镀锌钢体	***0*** *Zinc plated steel case*
2 AISI 316 *不锈钢	***2*** *Stainless steel AISI 316 **
5 AISI 303 *不锈钢	***5*** *Stainless steel AISI 303 **
* 标准G 1/4" 圆柱	* *Standard G1/4" cylindrical*

● 螺纹 (X3)	*Threads (X3)*	L1	L2 (mm)
1 1/8" Gas 圆锥	***1*** *1/8" Gas conical*	10	52
2 1/4" Gas 圆锥	***2*** *1/4" Gas conical*	12	54
3 M10x1K 圆锥	***3*** *M10x1K conical*	10	52
H 1/4" Gas 圆柱	***H*** *1/4" Gas cylindrical*	12	54

电触点	镀银 AgNi（可要求镀金）
电流状态	常开（紫色）常闭（蓝色）
最大开关电压	48 V ac / dc
最大开关电流	0.5A（可要求2A）
液体最高温度	100° C
机械工作寿命	10^5 活塞版本 (10-300 巴)
电气工作寿命	10^6 活塞版本
最大超压限制	800 巴
最大工作压力	450 巴
启动条件	1B
防护等级	IP00（见 18-20页保护盖和连接器）
■ **密封**	NBR +铁氟龙（见 17页）
重量	~ 75 g

Electric contacts	Silver AgNi, (gold plated on request)
Electrical condition	N.O. (bordeaux) or N.C. (blue)
Max switched voltage	48 V ac / dc
Max switched current	0.5 A (2A on request)
Max fluid temperature	100° C
Mechanical working life	10^5 operations (10-300 bar)
Electrical working life	10^5 operations
Max Overpressure limit	800 bar
Max working pressure	450 bar
Action type	1B
Protection degree	IP 00 (see pages 18-20 for protection caps and connectors)
■ **Seal**	NBR+Teflon /see page 17)
Weight	~ 75 g

请参阅Euroswitch20-03-1压力开关目录册，第11-15页的一般说明，以便正确使用。*For a correct use please refer to "General Notes" in the pressure switches Euroswitch catalogue 20-03-1, p. 11-15.*

本公司保留随时修改产品技术特征或停止生产的权利，恕不另行通知。*The Company reserves the right to modify the technical features of the products or halt production at any time without notice.*

膜片压力开关 ≤ 48V
DIAPHRAGM PRESSURE SWITCH ≤ 48V

41-41V

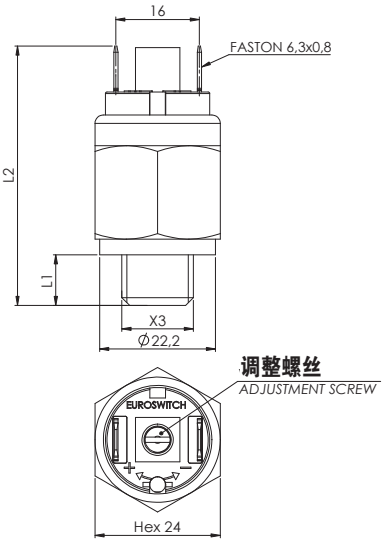

41

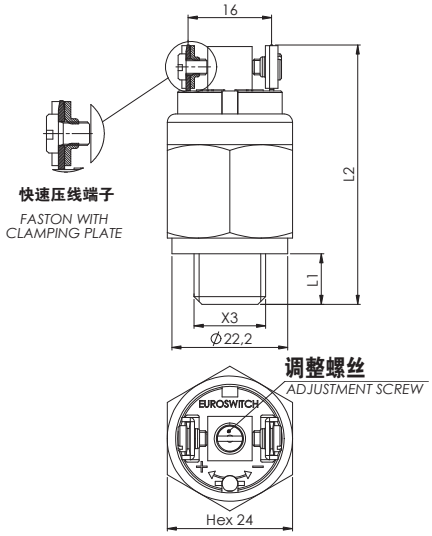

41V

代码 - *PART NUMBER*

电触点 - *electrical contact*																设定范围 / *Setting range* 巴 bar	20°C下的公差 / *Tolerance at 20°C* 巴 bar
常开 *norm. open*							常闭 *norm. closed*										
41(V)	1	▲	●	■	0		**41(V)**	2	▲	●	■	0				0.1 - 1	± 0.1
41(V)	1	▲	●	■	A		**41(V)**	2	▲	●	■	A				0.2 - 2	± 0.15
41(V)	1	▲	●	■	1		**41(V)**	2	▲	●	■	1				1 - 5	± 0.3
41(V)	1	▲	●	■	2		**41(V)**	2	▲	●	■	2				1 -10	± 0.5
41(V)	1	▲	●	■	3		**41(V)**	2	▲	●	■	3				10 - 20	± 1.0
41(V)	1	▲	●	■	4		**41(V)**	2	▲	●	■	4				20 - 50 (1)	± 2.0

(V) = 快速压线端子 / *faston with clamping plate*

(1) 仅适用于镀锌本体 - *Available only with body Zinc plated or Stainless steel*

▲ 活塞	*Case Material*
0 镀锌钢体	***0*** *Zinc plated steel case*
1 黄铜	***1*** *Brass*
2 AISI 316 * 不锈钢	***2*** *Stainless steel AISI 316 **
5 AISI 303 * 不锈钢	***5*** *Stainless steel AISI 303 **
*标准G 1/4" 圆柱	** Standard G1/4" cylindrical*

● 螺纹 (X3)	*Threads (X3)*	L1	L2 (mm)
1 1/8" Gas 圆锥	***1*** *1/8" Gas conical*	10	51
2 1/4" Gas 圆锥	***2*** *1/4" Gas conical*	12	53
3 M10x1K 圆锥	***3*** *M10x1K conical*	10	51
4 M12x1,5 圆柱	***4*** *M12x1,5 cylindrical*	9	50
5 1/8" NPT	***5*** *1/8" NPT*	10	51
6 1/4" Gas 圆柱	***6*** *1/4" Gas cylindrical*	9,7	50,7
8 M10x1 圆柱	***8*** *M10x1 cylindrical*	9,5	50,5
G 1/8" Gas 圆柱	***G*** *1/8" Gas cylindrical*	10	51

■ 膜片（见17页）	*Diaphragms (see page 17)*
1 NBR	***1*** *NBR*
2 FKM (标准)	***2*** *FKM (standard)*
3 EPDM CH	***3*** *EPDM CH*
4 CR	***4*** *CR*
5 硅酮	***5*** *Sylicon*
6 HNBR	***6*** *HNBR*

电触点	镀银 AgNi（可要求镀金）
电流状态	常开（紫色）常闭（蓝色
最大开关电压	48 Vac / dc
最大开关电流	0.5A（可要求2A）
液体最高温度	80°至120°C（根据膜片）
机械工作寿命	10^6 活塞版本
电气工作寿命	10^6 活塞版本
最大超压限制	镀锌钢 / 不锈钢 300 巴 黄铜 80 巴
最大工作压力	镀锌钢 / 不锈钢 150 巴 黄铜 40 巴
启动条件	1B
防护等级	IP00（见 18-20页保护盖和连接器）
重量	~ 65 g

Electric contacts	Silver AgNi, (gold plated on request)
Electrical conditions	N.O. (bordeaux) N.C. (blu)
Max switches voltage	48 V ac / dc
Max switches current	0.5 A (2A on request)
Max fluid temperature	80° to 120°C (depending on diaphragm)
Mechanical working life	10^6 operations
Electrical working life	10^5 operations
Max Overpressure limit	Zinc plated steel / Stainless steel 300 bar Brass 80 bar
Max Working pressure	Zinc plated steel / Stainless steel 150 bar Brass 40 bar
Action type	1B
Protection degree	IP 00 (see pages 18-20 for protection caps and connectors)
Weight	~65 g

请参阅Euroswitch20-03-1压力开关目录册，第11-15页的一般说明，以便正确使用。*For a correct use please refer to "General Notes" in the pressure switches Euroswitch catalogue 20-03-1, p. 11-15.*

本公司保留随时修改产品技术特征或停止生产的权利，恕不另行通知。*The Company reserves the right to modify the technical features of the products or halt production at any time without notice.*

41B-41BV
41C-41CV

高压膜片压力开关
HIGH PRESSURE DIAPHRAGM PRESSURE SWITCH

过压安全 600 巴
OVER PRESSURE LIMIT 600 BAR

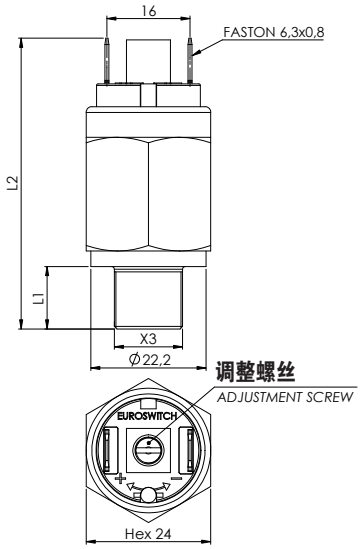

41B-41C

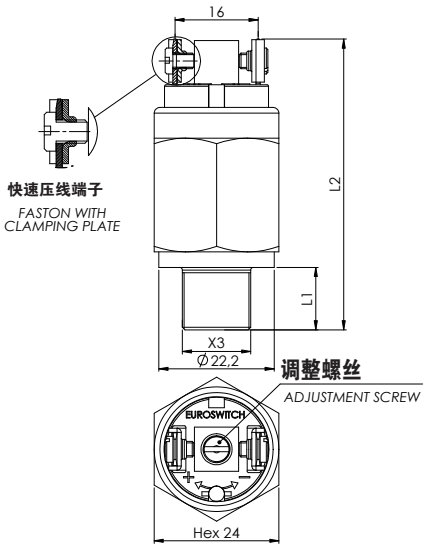

41BV-41CV

代码 - *PART NUMBER*

镀锌钢体 - *ZINC PLATED STEEL CASE* 电触点 - *electrical contact* 常开 *norm. open*						常闭 *norm. closed*						设定范围 / *Setting range* 巴 bar	20°C下的公差 / *Tolerance at 20°C* 巴 bar
41B(V)	1	0	●	■	2	**41B(V)**	2	0	●	■	2	1 - 10	± 0.5
41B(V)	1	0	●	■	3	**41B(V)**	2	0	●	■	3	10 - 20	± 1
41C(V)	1	0	●	■	4	**41C(V)**	2	0	●	■	4	20 - 50	± 2
41C(V)	1	0	●	■	5	**41C(V)**	2	0	●	■	5	50 - 150	± 5

(V) = 快速压线端子/ *faston with clamping plate*

● **螺纹 (X3)**	***Threads (X3)***	**L1**	**L2** (mm)
1 1/8" Gas 圆锥	***1*** *1/8" Gas conical*	10	54
2 1/4" Gas 圆锥	***2*** *1/4" Gas conical*	12	56
3 M10x1K 圆锥	***3*** *M10x1K conical*	10	54
5 1/8" NPT	***5*** *1/8" NPT*	10	54
6 1/4" Gas 圆柱	***6*** *1/4" Gas cylindrical*	12	56

■ **膜片（见17页）**	***Diaphragms*** *(see page 17)*
1 NBR	***1*** *NBR*
2 FKM (标准)	***2*** *FKM (standard)*
3 EPDM CH	***3*** *EPDM CH*
4 CR	***4*** *CR*
6 HNBR	***6*** *HNBR*

机体	镀锌钢（按要求使用不锈钢）
电触点	镀银 AgNi（可要求镀金）
电流状态	常开（紫色）常闭（蓝色）
最大开关电压	48 V交流/直流（可要求250V）
最大开关电流	0.5A（可要求2A）
液体最高温度	80°至120°C（根据膜片）
机械工作寿命	41B 10^5 活塞版本
	41C 10^5 活塞版本
电气工作寿命	10^5 活塞版本
最大超压限制	600 巴
最大工作压力	300 巴
启动条件	1B
防护等级	IP00（见 18-20页保护盖和连接器）
重量	~ 70 g

Case	Zinc plated steel
Electric contacts	Silver AgNi (gold plated on request)
Electrical condition	N.O. (bordeaux) or N.C. (blue)
Max switched voltage	48 V ac / dc (250V on request)
Max switched current	0.5 A (2A on request)
Max fluid temperature	80° a 120°C depending on diaphragm
Mechanical working life	41B 10^5 operations
	41C 10^5 operations
Electrical working life	10^5 operations
Max Overpressure limit	600 bar
Max Working pressure	300 bar
Action type	1B
Protection degree	IP 00 (see pages 18-20 for protection caps and connectors)
Weight	~ 70 g

请参阅Euroswitch20-03-1压力开关目录册，第11-15页的一般说明，以便正确使用。*For a correct use please refer to "General Notes" in the pressure switches Euroswitch catalogue 20-03-1, p. 11-15.*
本公司保留随时修改产品技术特征或停止生产的权利，恕不另行通知。*The Company reserves the right to modify the technical features of the products or halt production at any time without notice.*

膜片压力开关≤48V - 内螺纹
DIAPHRAGM PRESSURE SWITCH ≤ 48V FEMALE THREAD

42 42V

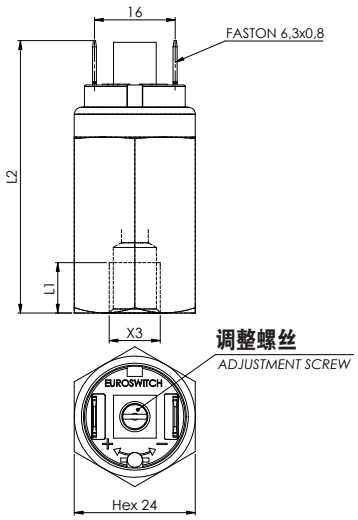

42

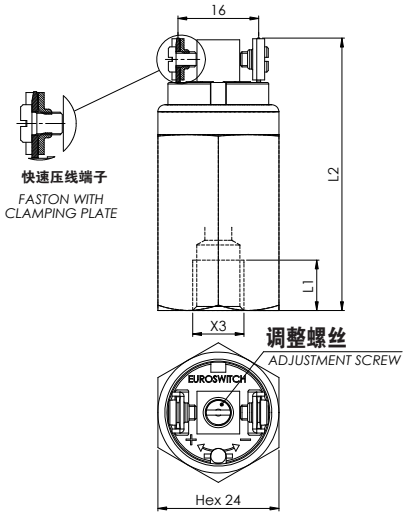

42V

代码 - *PART NUMBER*

电触点 - *electrical contact*														设定范围 / *Setting range* 巴 bar	20°C下的公差 / *Tolerance at 20°C* 巴 bar
常开 *norm. open*						常闭 *norm. closed*									
42 (V)	1	▲	●	■	0	**42 (V)**	2	▲	●	■	0	0.1 - 1	± 0.1
42 (V)	1	▲	●	■	A	**42 (V)**	2	▲	●	■	A	0.2 - 2	± 0.15
42 (V)	1	▲	●	■	1	**42 (V)**	2	▲	●	■	1	1 - 5	± 0.3
42 (V)	1	▲	●	■	2	**42 (V)**	2	▲	●	■	2	1 - 10	± 0.5
42 (V)	1	▲	●	■	3	**42 (V)**	2	▲	●	■	3	10 - 20	± 1.0
42 (V)	1	▲	●	■	4	**42 (V)**	2	▲	●	■	4	20 - 50 (1)	± 2.0

(V) = 快速压线端子 / *faston with clamping plate*

(1) 仅适用于镀锌本体 - *Available only with body Zinc plated or Stainless steel*

▲ 活塞	*Case Material*
0 镀锌钢体	***0*** *Zinc plated steel case*
1 黄铜	***1*** *Brass*
2 AISI 316 * 不锈钢	***2*** *Stainless steel AISI 316 **
5 AISI 303 * 不锈钢	***5*** *Stainless steel AISI 303 **

● 螺纹 (X3)	*Threads (X3)*
4 M12x1,5 圆柱	***4*** *M12x1,5 cylindrical*
6 1/4" Gas 圆柱	***6*** *1/4" Gas cylindrical*
8 M10x1 圆柱	***8*** *M10x1 cylindrical*
G 1/8" Gas 圆柱	***G*** *1/8" Gas cylindrical*
*标准G 1/4" 圆柱	** Standard G1/4" cylindrical*

■ 膜片（见17页）	*Diaphragms (see page 17)*
1 NBR	***1*** *NBR*
2 FKM (标准)	***2*** *FKM (standard)*
3 EPDM CH	***3*** *EPDM CH*
4 CR	***4*** *CR*
5 硅酮	***5*** *Sylicon*
6 HNBR	***6*** *HNBR*

电触点	镀银 AgNi（可要求镀金）
电流状态	常开（紫色）常闭（蓝色
最大开关电压	48 Vac / dc
最大开关电流	0.5A（可要求2A）
液体最高温度	80°至120°C（根据膜片）
机械工作寿命	10^6 活塞版本
电气工作寿命	10^5 活塞版本
最大超压限制	镀锌钢 / 不锈钢 300 巴 黄铜 80 巴
最大工作压力	镀锌钢 / 不锈钢 150 巴 黄铜 40 巴
启动条件	1B
防护等级	IP00（见 18-20页保护盖和连接器）
重量	~ 125 g

Electric contacts	Silver AgNi, (gold plated on request)
Electrical conditions	N.O. (bordeaux) N.C. (blu)
Max switches voltage	48 Vac / dc
Max switches current	0,5 A (2A on request)
Max fluid temperature	80° to 120°C (depending on diaphragm)
Mechanical working life	10^6 operations
Electrical working life	10^5 operations
Max Overpressure limit	Zinc plated steel / Stainless steel 300 bar Brass 80 bar
Max Working pressure	Zinc plated steel / Stainless steel 150 bar Brass 40 bar
Action type	1B
Protection degree	IP 00 (see pages 18-20 for protection caps and connectors)
Weight	~125 g

请参阅Euroswitch20-03-1压力开关目录册，第11-15页的一般说明，以便正确使用。*For a correct use please refer to "General Notes" in the pressure switches Euroswitch catalogue 20-03-1, p. 11-15.*

本公司保留随时修改产品技术特征或停止生产的权利，恕不另行通知。*The Company reserves the right to modify the technical features of the products or halt production at any time without notice.*

低压活塞压力开关 - SPDT 触点
PISTON PRESSURE SWITCH FOR LOW PRESSURE - SPDT CONTACTS

可按要求提供认证版本 ATEX / IECEX
Version ATEX / IECEX available on request

可按要求提供认证版本 *UL 508 FILE N° E478896 CSA C22.2.NO.14-13*
Version UL 508 FILE N° E478896 CSA C22.2.NO.14-13 available on request

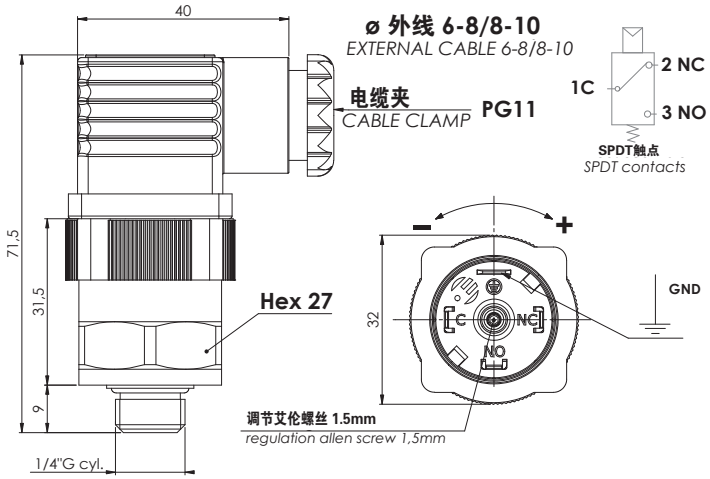

代码 - *PART NUMBER*

铝机体 *Aluminum case*	螺纹 - *thread*	设定范围 / *Setting range* 巴 bar	20°C下的公差 *Tolerance at 20°C* 巴 bar
46 2 3 6 1 2	1/4" gas 圆柱 - *cylindrical gas*	2 - 10	± 0,5

机体	铝	
电触点	镀银	
调整螺丝	调节删除螺丝 1.5mm	
液体最高温度	80°C	
电流状态	SPDT触点	
电气特性	5 (4) A / 14 Vdc	**UL CSA 版本**
	4 (3) A / 30 Vdc	3 A / 30 Vdc
	5 (3) A / 125 Vac	3 A / 125 Vac
	3 (2) A / 250 Vac	3 (3) A / 250 Vac
最大超压限制	50 巴	25 巴
最大工作压力	20 巴	20 巴
固定迟滞	最大 0,8 巴	
启动条件	1B	
机械工作寿命	$2x10^5$ 活塞版本 (0-10 巴)	
电气工作寿命	$5x10^4$ 活塞版本	
最大扭力	20 Nm	
防护等级	IP65	
根据 UNI EN 175301-803 (DIN43650) 带连接器		
■ **密封**	NBR +铁氟龙（见 17页）	
重量	~ 110 g	

Case	Aluminum	
Electric contacts	Silver	
Regulation screw	Allen Key 1,5 mm	
Max fluid temperature	80°C	
Electrical condition	SPDT (exchange contact)	
Electrical characteristics	5 (4) A / 14 Vdc	**UL CSA Version**
	4 (3) A / 30 Vdc	3 A / 30 Vdc
	5 (3) A / 125 Vac	3 A / 125 Vac
	3 (2) A / 250 Vac	3 (3) A / 250 Vac
Max Overpressure limit	50 bar	25 bar
Max Working pressure	20 bar	20 bar
Fixed hystereis	max 0,8 bar	
Action type	1B	
Mechanical working life	$2x10^5$ operations (0-10bar)	
Electrical working life	$5x10^4$ operations	
Tightening torque max	20 Nm	
Protection degree	IP65	
with connector according to UNI EN 175301-803 (DIN43650)		
■ **Seal**	NBR + Teflon (see page 17)	
Weight	~ 110 g	

请参阅Euroswitch20-03-1压力开关目录册，第11-15页的一般说明，以便正确使用。*For a correct use please refer to "General Notes" in the pressure switches Euroswitch catalogue 20-03-1, p. 11-15.*
本公司保留随时修改产品技术特征或停止生产的权利，恕不另行通知。*The Company reserves the right to modify the technical features of the products or halt production at any time without notice.*

活塞压力开关 - SPDT 触点
PISTON PRESSURE SWITCH WITH SPDT CONTACTS

可按要求提供认证版本 ATEX / IECEX
Version ATEX / IECEX available on request

可按要求提供认证版本 *UL 508 FILE N° E478896 CSA C22.2.NO.14-13*
Version UL 508 FILE N° E478896 CSA C22.2.NO.14-13 available on request

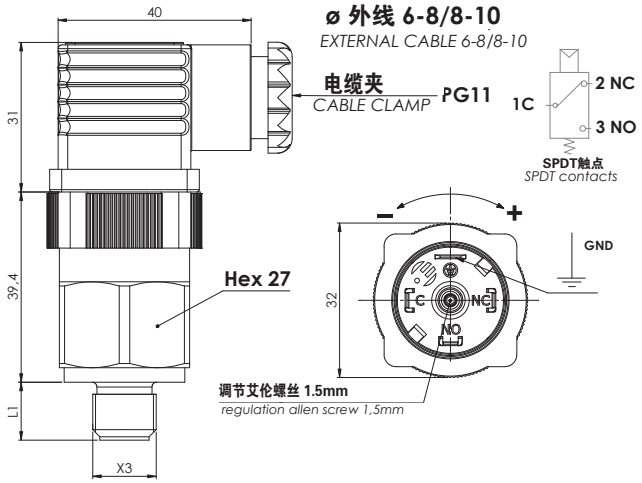

代码 - *PART NUMBER*	设定范围 / *Setting range* 巴 bar	20°C下的公差 / *Tolerance at 20°C* 巴 bar
48 2 ▲ ● 1 6	50 ÷ 200	± 2 ÷ 10
48 2 ▲ ● 1 7	200 ÷ 400	± 4 ÷ 15

▲ 活塞	*Case Material*	● 螺纹 (X3)	*Threads (X3)*	L1
0 镀锌钢体	***0*** *Zinc plated steel case*	**2** 1/4" Gas 圆锥	***2*** *1/4" Gas conical*	12
2 AISI 316 * 不锈钢	***2*** *Stainless steel AISI 316 **	**H** 1/4" Gas 圆柱	***H*** *1/4" Gas cylindrical*	12
5 AISI 303 * 不锈钢	***5*** *Stainless steel AISI 303 **			
* 标准G 1/4" 圆柱	** Standard G1/4" cylindrical*			

UL CSA 版本在代码末尾添加 U。示例：: 48 2 ▲ ● ■ U
*For **UL CSA** version add **U** at the end of the code Example: 48 2 ▲ ● ■ U*

电触点	镀银	
调整螺丝	调节螺丝 1. 5mm	
液体最高温度	100°C - UL CSA 版本 85°C	
电流状态	SPDT触点	
电气特性	5 (4) A / 14 Vdc	**UL CSA 版本**
	4 (3) A / 30 Vdc	3 A / 30 Vdc
	5 (3) A / 125 Vac	3 A / 125 Vac
	3 (2) A / 250 Vac	3 (3) A / 250 Vac
最大超压限制	镀锌钢 900 巴 不锈钢	425 巴
最大工作压力	镀锌钢 450 巴 不锈钢	400 巴
固定迟滞	设定值的~ 10÷40%	
启动条件	1B	
机械工作寿命	10^6 活塞版本	
最大扭力	50 Nm	
防护等级	IP65	
根据 UNI EN 175301-803 (DIN43650) 带连接器		
■ **密封**	NBR +铁氟龙（见 17页）	
重量	~ 120	

Electric contacts	Silver	
Regulation screw	Allen Key 1,5 mm	
Max fluid temperature	100°C - UL/CSA version 85°C	
Electrical condition	SPDT (exchange contact)	
Electrical characteristics	5 (4) A / 14 Vdc	**UL CSA Version**
	4 (3) A / 30 Vdc	3 A / 30 Vdc
	5 (3) A / 125 Vac	3 A / 125 Vac
	3 (2) A / 250 Vac	3 (3) A / 250 Vac
Max Overpressure limit	Zinc plated steel 900 bar Stainless steel	425 bar
Max Working pressure	Zinc plated steel 450 bar Stainless steel	400 bar
Fixed Hysteresis	~ 10÷40% of setting value	
Action type	1B	
Mechanical working life	10^6 operations	
Tightening torque max	50 Nm	
Protection degree	IP65	
with connector according to UNI EN 175301-803 (DIN43650)		
■ **Seal**	NBR + Teflon (see p. 17)	
Weight	~ 120 g	

请参阅Euroswitch20-03-1压力开关目录册，第11-15页的一般说明，以便正确使用。*For a correct use please refer to "General Notes" in the pressure switches Euroswitch catalogue 20-03-1, p. 11-15.*
本公司保留随时修改产品技术特征或停止生产的权利，恕不另行通知。*The Company reserves the right to modify the technical features of the products or halt production at any time without notice.*

膜片压力开关 - SPDT 触点
DIAPHRAGM PRESSURE SWITCH WITH SPDT CONTACTS

可按要求提供认证版本 ATEX / IECEX
Version ATEX / IECEX available on request

可按要求提供认证版本 *UL 508 FILE N° E478896 CSA C22.2.NO.14-13*
Version UL 508 FILE N° E478896 CSA C22.2.NO.14-13 available on request

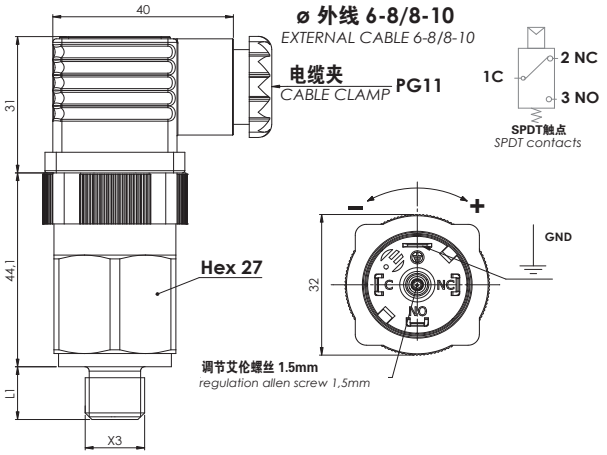

代码 - *PART NUMBER*	设定范围 / *Setting range* 巴 bar	20°C下的公差 / *Tolerance at 20°C* 巴 bar
49 2 ▲ ● ■ 0	0.3 - 1.5	± 0.15
49 2 ▲ ● ■ 1	1 - 5	± 0.3
49 2 ▲ ● ■ 2	1 - 12	± 0.5
49 2 ▲ ● ■ 3	10 - 60 (1)	± 2

(1) 仅适用于镀锌本体 - *Available only with body Zinc plated or Stainless steel*

▲ 活塞	*Case Material*
0 镀锌钢体	***0*** *Zinc plated steel case*
1 黄铜	***1*** *Brass*
2 AISI 316 * 不锈钢	***2*** *Stainless steel AISI 316 **
5 AISI 303 * 不锈钢	***5*** *Stainless steel AISI 303 **
* 标准G 1/4" 圆柱	** Standard G1/4" cylindrical*

● 螺纹 (X3)	*Threads (X3)*	L1 (mm)
1 1/8" Gas 圆锥	***1*** *1/8" Gas conical*	10
2 1/4" Gas 圆锥	***2*** *1/4" Gas conical*	12
3 M10x1K 圆锥	***3*** *M10x1K conical*	10
4 M12x1,5 圆柱	***4*** *M12x1,5 cylindrical*	9
H 1/4" Gas 圆柱	***H*** *1/4" Gas cylindrical*	12
G 1/8" Gas 圆柱	***G*** *1/8" Gas cylindrical*	10

■ 膜片（见17页）	*Diaphragms* (see page 17)
1 NBR	***1*** *NBR*
2 FKM (标准)	***2*** *FKM (standard)*
3 EPDM CH	***3*** *EPDM CH*
4 CR	***4*** *CR*
5 硅酮	***5*** *Sylicon*
6 HNBR	***6*** *HNBR*

UL CSA 版本在代码末尾添加 U。示例：: 49 2 ▲ ● ■ U
*For **UL CSA** version add **U** at the end of the code Example: 49 2 ▲ ● ■ U*

电触点	镀银		
调整螺丝	调节螺丝 1.5mm		
液体最高温度	80°至120°C（根据膜片） UL CSA 版本 85°C		
电流状态	SPDT触点		
电气特性	5 (4) A / 14 Vdc		**UL CSA 版本**
	4 (3) A / 30 Vdc		3 A / 30 Vdc
	5 (3) A / 125 Vac		3 A / 125 Vac
	3 (2) A / 250 Vac		3 (3) A / 250 Vac
最大超压限制	钢	300 巴	75 巴
	黄铜	80 巴	40 巴
最大工作压力	钢	150 巴	60 巴
	黄铜	40 巴	12 巴
固定迟滞	设定值的~ 10÷40%		
启动条件	1B		
机械工作寿命	10^6 活塞版本		
最大扭力	25/50 Nm		
防护等级	IP65		
根据 UNI EN 175301-803 (DIN43650) 带连接器			
重量	~ 140 g		

Electric contacts	Silver		
Regulation screw	Allen Key 1,5 mm		
Max fluid temperature	80° to 120°C depending on diaphragm UL/CSA version 85°C		
Electrical condition	SPDT (exchange contact)		
Electrical characteristics	5 (4) A / 14 Vdc		**UL CSA Version**
	4 (3) A / 30 Vdc		3 A / 30 Vdc
	5 (3) A / 125 Vac		3 A / 120 Vac
	3 (2) A / 250 Vac		3 (3) A / 250 Vac
Max Overpressure limit	Steel	300 bar	75 bar
	Brass	80 bar	40 bar
Max Working pressure	Steel	150 bar	60 bar
	Brass	40 bar	12 bar
Fixed Hysteresis	~ 10÷30% of setting value		
Action type	1B		
Mechanical working life	10^6 operations		
Tightening torque max	25/50 Nm		
Protection degree	IP65		
with connector according to UNI EN 175301-803 (DIN43650)			
Weight	~ 140 g		

请参阅Euroswitch20-03-1压力开关目录册，第11-15页的一般说明，以便正确使用。*For a correct use please refer to "General Notes" in the pressure switches Euroswitch catalogue 20-03-1, p. 11-15.*
本公司保留随时修改产品技术特征或停止生产的权利，恕不另行通知。*The Company reserves the right to modify the technical features of the products or halt production at any time without notice.*

双微动压力开关
PRESSURE SWITCH WITH DOUBLE MICROSWITCH

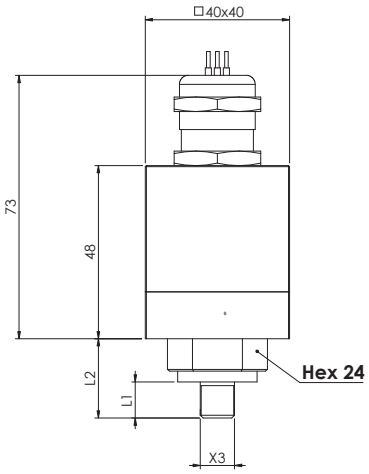

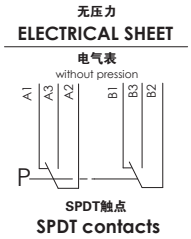

冲击和振动删除批准符合CEI EN 61373:2012, 在CAT 3后面加上 标准

Shock and Vibration Approved according to the standard: CEI EN 61373:2012, Cat 3

代码 - *PART NUMBER*	设置和重置恢复在Euroswitch公司调整 *Setting and resetting adjustable in Euroswitch on request*	20°C下的公差 / *Tolerance at 20°C* 巴 bar
67 2 ▲ ● ■ 1	1 - 4	± 0,3
67 2 ▲ ● ■ 2	3 - 6	± 0,5

▲ 活塞 螺纹连接	*Case Material Thread connection*
0 镀锌钢体	***0*** *Zinc plated steel case*
2 AISI 316 * 不锈钢	***2*** *Stainless steel AISI 316 **
5 AISI 303 * 不锈钢	***5*** *Stainless steel AISI 303*
* 标准	* *Standard*

● 螺纹 (X3)	*Threads (X3)*	L1	L2 (mm)
2 1/4" Gas 圆锥	***2*** *1/4" Gas conical*	12	24
6 1/4" Gas 圆柱	***6*** *1/4" Gas cylindrical*	12	24
G 1/8" Gas 圆柱	***G*** *1/8" Gas cylindrical*	10	22
* 标准G 1/4" 圆柱	* *Standard G1/8" cylindrical*		

■ 膜片（见17页）	*Diaphragms* *(see page 17)*
1 NBR	***1*** *NBR*
3 EPDM CH	***3*** *EPDM CH*
6 HNBR	***6*** *HNBR*

机体	阳极氧化铝
电缆夹	镀镍黄铜
电气连接	Radox电线 L= 1米 1毫米^2
电气特性	5 (4) A / 14 Vdc
	4 (3) A / 30 Vdc
	5 (3) A / 125 Vac
	3 (2) A / 250 Vac
液体最高温度	-30°至80°C（根据膜片）
启动条件	1B
机械工作寿命	10^6
最大超压限制	50 巴
最大工作压力	20 巴
固定迟滞	设定值的~ 10÷30%
防护等级	IP67
重量	~ 280 g

Case	Anodized aluminium
Gland	Nickel plated Brass
Electrical connection	Wires in Radox L= 1mt 1mm^2
Electrical characteristics	5 (4) A / 14 Vdc
	4 (3) A / 30 Vdc
	5 (3) A / 125 Vac
	3 (2) A / 250 Vac
Max fluid temperature	-30° to 80°C depending on diaphragm
Action type	1B
Mechanical working life	10^6
Max overpressure limit	50 bar
Max working pressure	20 bar
Fixed hysteresis	~ 10%÷30% of setting value
Protection degree	IP67
Weight	~ 280 g

请参阅Euroswitch20-03-1压力开关目录册，第11-15页的一般说明，以便正确使用。*For a correct use please refer to "General Notes" in the pressure switches Euroswitch catalogue 20-03-1, p. 11-15.*

本公司保留随时修改产品技术特征或停止生产的权利，恕不另行通知。*The Company reserves the right to modify the technical features of the products or halt production at any time without notice.*

681

可视设置刻度压力开关
PRESSURE SWITCH WITH VISUAL SETTING SCALE

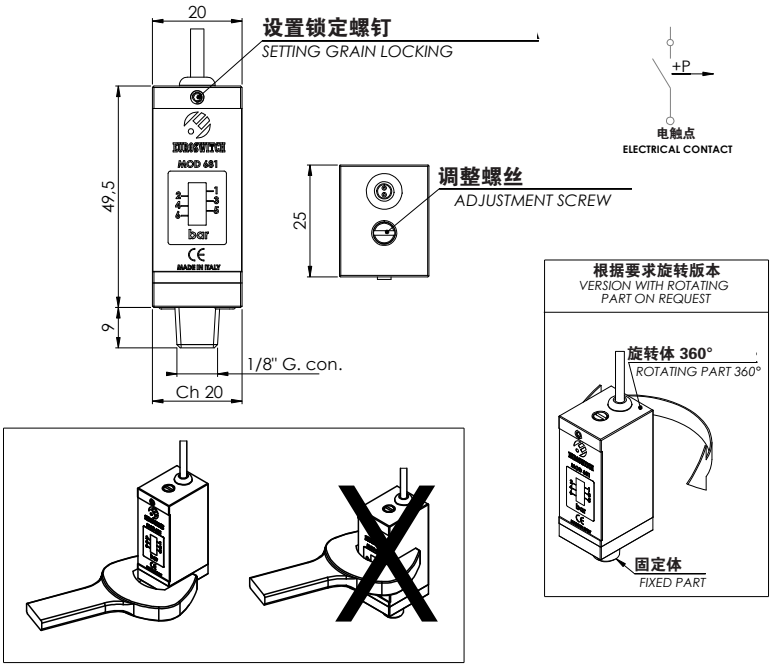

代码 - *PART NUMBER*	螺纹 / *Thread*	设定范围 / *Setting range* 巴 bar
681 1 3 1 1 1	1/8" gas 圆锥 - *conical*	1 - 6

介质	空气
机体	阳极氧化铝
螺纹	黄铜
标签	光学聚碳酸酯
电气连接	PVC电缆 2x0,22 毫米^2
	L= 1000 mm
电触点	Reed SPST NA
最大开关电压	48V
最大开关电流	0,5A
最大开关电容	10W
液体最高温度	60° C
最大超压限制	20 巴
启动条件	1B
机电寿命	10^6
防护等级	IP40
最大扭力	15 - 20 Nm
重量	~ 95 g

Medium	Air
Case	Anodized aluminium
Threaded fitting	Brass
Label	Optical polycarbonate
Electrical connection	PVC cable 2x0,22 mm^2
	L= 1000 mm
Type of contact	Reed SPST NO
Max switch voltage	48V
Max switch current	0,5A
Max switch capacity	10W
Max fluid temperature	60° C
Max Overpressure limit	20 bar
Action type	1B
Mech. and electrical working life	10^6
Protection degree	IP40
Thightening torque	15 - 20 Nm
Weight	~ 95 g

请参阅Euroswitch20-03-1压力开关目录册，第11-15页的一般说明，以便正确使用。*For a correct use please refer to "General Notes" in the pressure switches Euroswitch catalogue 20-03-1, p. 11-15.*

本公司保留随时修改产品技术特征或停止生产的权利，恕不另行通知。*The Company reserves the right to modify the technical features of the products or halt production at any time without notice.*

可视设置刻度压力开关
PRESSURE SWITCH WITH VISUAL SETTING SCALE

682

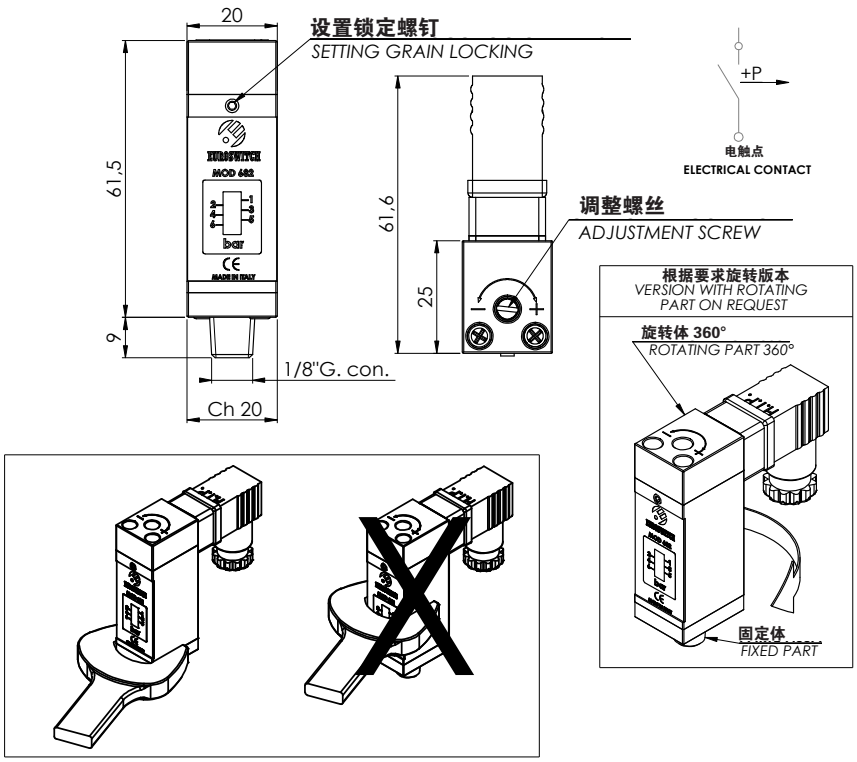

代码 - *PART NUMBER*	螺纹 / *Thread*	设定范围 / *Setting range* 巴 bar
682 1 3 1 1 1	1/8" gas 圆锥 - *conical*	1 - 6

介质	空气
机体	阳极氧化铝
螺纹	黄铜
标签	光学聚碳酸酯
电气连接	DIN43650-C int-9,4 连接器
电触点	Reed SPST NA
最大开关电压	48V
最大开关电流	0,5A
最大开关电容	10W
液体最高温度	60° C
最大超压限制	20 巴
启动条件	1B
机电寿命	10^6
防护等级	IP40
最大扭力	15 - 20 Nm
重量	~ 105 g

Medium	Air
Case	Anodized aluminium
Threaded fitting	Brass
Label	Optical polycarbonate
Electrical connection	Connector DIN43650-C int-9,4
Type of contact	Reed SPST NO
Max switch voltage	48V
Max switch current	0,5A
Max switch capacity	10W
Max fluid temperature	60° C
Max Overpressure limit	20 bar
Action type	1B
Mech. and electrical working life	10^6
Protection degree	IP40
Thightening torque	15 - 20 Nm
Weight	~ 105 g

请参阅Euroswitch20-03-1压力开关目录册，第11-15页的一般说明，以便正确使用。*For a correct use please refer to "General Notes" in the pressure switches Euroswitch catalogue 20-03-1, p. 11-15.*

本公司保留随时修改产品技术特征或停止生产的权利，恕不另行通知。*The Company reserves the right to modify the technical features of the products or halt production at any time without notice.*

691

带调节环的活塞压力开关
PISTON PRESSURE SWITCH WITH ADJUSTING RING

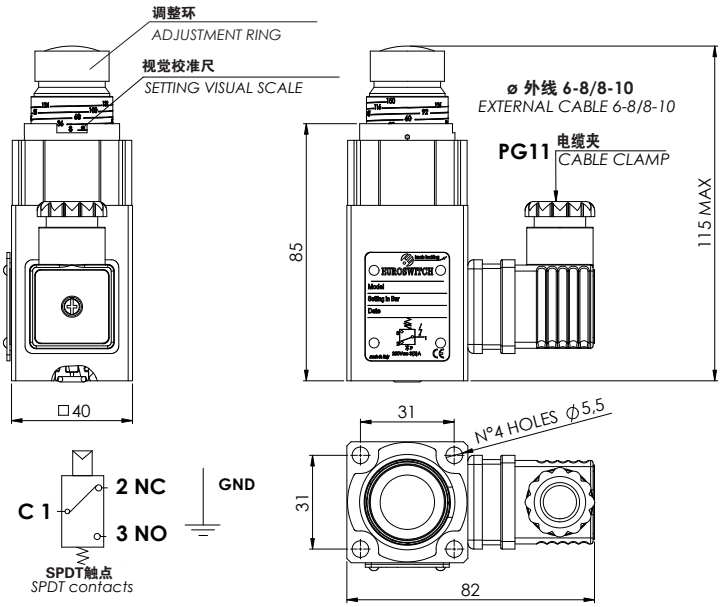

代码 - *PART NUMBER*	设定范围 / *Setting range* 巴 bar	下的公差 / *Tolerance*
691 2 3 0 1 5	8 - 160	± 2%
691 2 3 0 1 6	40 - 400	± 2%

机体	阳极氧化铝
电触点	SPDT 镀银
液体最高温度	100°C
电气特性	5 (4) A / 14 Vdc
	4 (3) A / 30 Vdc
	5 (3) A / 125 Vac
	3 (2) A / 250 Vac
固定迟滞	设定值的~ 10%
最大超压限制	900 巴
启动条件	1B
机械工作寿命	10^6 活塞版本
固定	歧管连接
防护等级	IP65
根据 UNI EN 175301-803 (DIN43650) 带连接器	
■ **密封**	NBR +铁氟龙（见 17页）
重量	~ 400 g
提供垫片和紧固螺丝	

Case	Anodized aluminium
Electric contacts	SPDT Silver
Max fluid temperature	100°C
Electrical characteristics	5 (4) A / 14 Vdc
	4 (3) A / 30 Vdc
	5 (3) A / 125 Vac
	3 (2) A / 250 Vac
Fixed hystereis	approximately 10% of setting value
Max Overpressure limit	900 bar
Action type	1B
Mechanical working life	10^6 operations
Fixing	Manifold connection
Protection degree	IP65
with connector according to UNI EN 175301-803 (DIN43650)	
■ **Seal**	NBR+Teflon (see page 17)
Weight	~ 400 g
Supplied with gasket and fixing screws	

请参阅Euroswitch20-03-1压力开关目录册，第11-15页的一般说明，以便正确使用。*For a correct use please refer to "General Notes" in the pressure switches Euroswitch catalogue 20-03-1, p. 11-15.*
本公司保留随时修改产品技术特征或停止生产的权利，恕不另行通知。*The Company reserves the right to modify the technical features of the products or halt production at any time without notice.*

带调节环的活塞压力开关
PISTON PRESSURE SWITCH WITH ADJUSTING RING

692

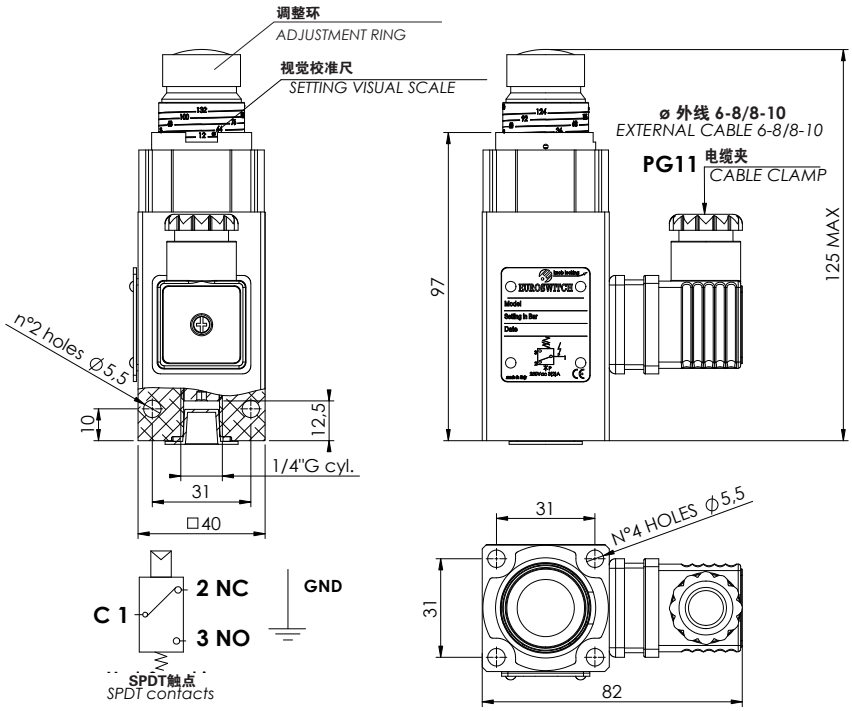

代码 - *PART NUMBER*	设定范围 / *Setting range* 巴 bar	下的公差 / *Tolerance*
692 2 3 0 **1** 5	8 - 160	± 2%
692 2 3 0 **1** 6	40 - 400	± 2%

机体	阳极氧化铝
电触点	SPDT 镀银
液体最高温度	100°C
电气特性	5 (4) A / 14 Vdc
	4 (3) A / 30 Vdc
	5 (3) A / 125 Vac
	3 (2) A / 250 Vac
固定迟滞	设定值的~ 10%
最大超压限制	900 巴
启动条件	1B
机械工作寿命	10^6 活塞版本
固定	螺纹管连接 - G 1/4" F 螺纹
防护等级	IP65
根据 UNI EN 175301-803 (DIN43650) 带连接器	
■ **密封**	NBR +铁氟龙（见 17页）
重量	~ 460 g
提供垫片和紧固螺丝	

Case	Anodized aluminium
Electric contacts	SPDT Silver
Max fluid temperature	100°C
Electrical characteristics	5 (4) A / 14 Vdc
	4 (3) A / 30 Vdc
	5 (3) A / 125 Vac
	3 (2) A / 250 Vac
Fixed hystereis	approximately 10% of setting value
Max Overpressure limit	900 bar
Action type	1B
Mechanical working life	10^6 operations
Fixing	Manifold connection - G 1/4" F
Protection degree	IP65
with connector according to UNI EN 175301-803 (DIN43650)	
■ **Seal**	NBR+Teflon (see page 17)
Weight	~ 460 g
Supplied with gasket and fixing screws	

请参阅Euroswitch20-03-1压力开关目录册，第11-15页的一般说明，以便正确使用。*For a correct use please refer to "General Notes" in the pressure switches Euroswitch catalogue 20-03-1, p. 11-15.*

本公司保留随时修改产品技术特征或停止生产的权利，恕不另行通知。*The Company reserves the right to modify the technical features of the products or halt production at any time without notice.*

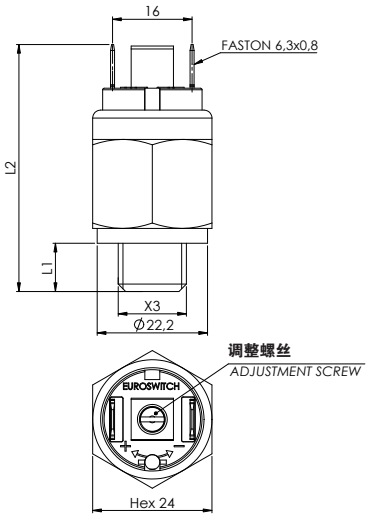

35

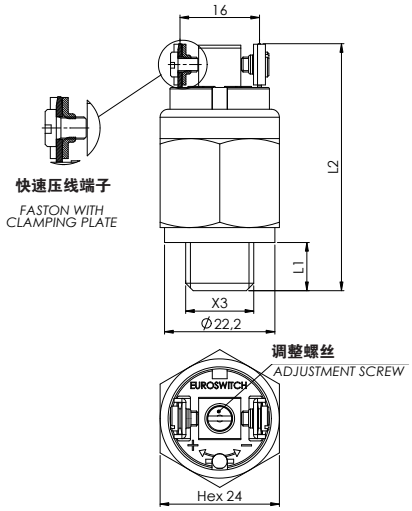

35V

代码 - *PART NUMBER*

型号 / Mod. 35																			
电触点 - *electrical contact* 常开 *norm. open*										电触点 - *electrical contact* 常闭 *norm. closed*										设定范围 *Setting range* 巴 bar	20°C下的公差 *Tolerance at 20°C* 巴 bar
35(V)	1		1		●		■		9	**35(V)**	2		1		●		■		9	-200 / -900	± 100

(V) = 快速压线端子 / *faston with clamping plate*

● 螺纹 (X3)	*Threads (X3)*	L1	L2 (mm)
1 1/8" Gas 圆锥	***1*** *1/8" Gas conical*	10	50
2 1/4" Gas 圆锥	***2*** *1/4" Gas conical*	12	52
3 M10x1 圆锥	***3*** *M10x1 conical*	10	50
5 1/8" NPT	***5*** *1/8" NPT*	10	50

■ 膜片（见17页）	*Diaphragms* *(see page 17)*
1 NBR (标准)	***1*** *NBR (standard)*
2 FKM	***2*** *FKM*
3 EPDM CH	***3*** *EPDM CH*
4 CR	***4*** *CR*
6 HNBR	***6*** *HNBR*

机体	黄铜 （可要求不锈）
电触点	镀银 AgNi（可要求镀金）
电流状态	常开（本色）常闭（赭色）
最大开关电压	48V ac / dc
最大开关电流	0.5A（可要求2A）
液体最高温度	80°至120°C（根据膜片）
最大超压限制	15 巴
最大工作压力	10 巴
启动条件	1B
机械工作寿命	10^6 活塞版本
电气工作寿命	10^5 活塞版本
防护等级	IP00（见 18-20页保护盖和连接器）
重量	~ 70 g

Case	Brass (inox on request)
Electric contacts	Silver AgNi, (gold plated on request)
Electrical connection	N.O. (natural color) N.C. (ochre)
Max switch voltage	48V ac / dc
Max switch current	0,5A (2A on request)
Max fluid temperature	80°-120°C (depending on diaphragm)
Max Overpressure limit	15 bar
Max Working pressure	10 bar
Action type	1B
Mechanical working life	10^6 operations
Electrical working life	10^5 operations
Protection degree	IP 00 (see pages 18-20 for protection caps and connectors)
Weight	~ 70 g

请参阅Euroswitch20-03-1压力开关目录册，第11-15页的一般说明，以便正确使用。*For a correct use please refer to "General Notes" in the pressure switches Euroswitch catalogue 20-03-1, p. 11-15.*
本公司保留随时修改产品技术特征或停止生产的权利，恕不另行通知。*The Company reserves the right to modify the technical features of the products or halt production at any time without notice.*

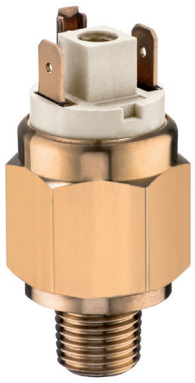

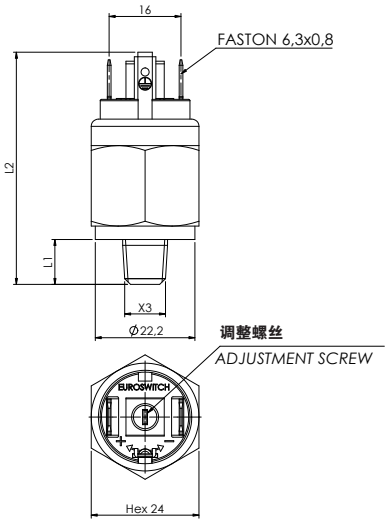

37

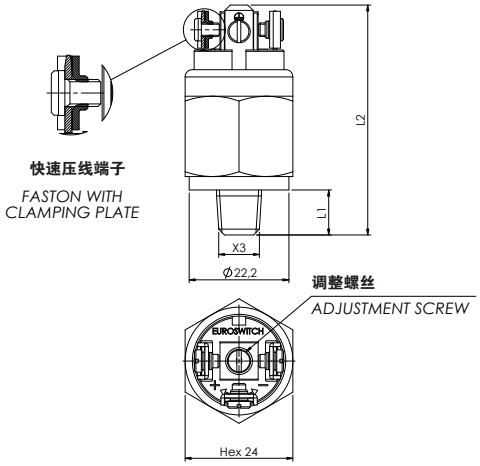

37V

CODICE - *PART NUMBER*

型号 / Mod. 37																			
电触点 - *electrical contact* 常开 *norm. open*										电触点 - *electrical contact* 常闭 *norm. closed*										设定范围 *Setting range* 巴 bar	20°C下的公差 *Tolerance at 20°C* 巴 bar
37(V)	1		1		●		■		9	**37(V)**	2		1		●		■		9	-200 / -900	± 100

(V) =快速压线端子 / *faston with clamping plate*

● 螺纹 (X3)	*Threads (X3)*	L1	L2 (mm)
1 1/8" Gas 圆锥	***1*** *1/8" Gas conical*	10	50
2 1/4" Gas 圆锥	***2*** *1/4" Gas conical*	12	52
3 M10x1 圆锥	***3*** *M10x1 conical*	10	50
5 1/8" NPT	***5*** *1/8" NPT*	10	50

■ 膜片（见17页）	*Diaphragms* *(see page 17)*
1 NBR (标准)	***1*** *NBR (standard)*
2 FKM	***2*** *FKM*
3 EPDM CH	***3*** *EPDM CH*
4 CR	***4*** *CR*
6 HNBR	***6*** *HNBR*

机体	黄铜 （可要求不锈）
电触点	镀银 AgNi（可要求镀金）
电流状态	常开（本色）常闭（赭色）
最大开关电压	250V
最大开关电流	0,5A
液体最高温度	80°至120°C（根据膜片）
最大超压限制	15 巴
最大工作压力	10 巴
启动条件	1B
机械工作寿命	10^6 活塞版本
电气工作寿命	10^5 活塞版本
防护等级	IP00（见 18-20页保护盖和连接器）
重量	~ 70 g

Case	Brass (inox on request)
Electric contacts	Silver AgNi, (gold plated on request)
Electrical connection	N.O. (natural color) N.C. (ochre)
Max switch voltage	250V
Max switch current	0,5A
Max fluid temperature	80°-120°C (depending on diaphragm)
Max Overpressure limit	15 bar
Max Working pressure	10 bar
Action type	1B
Mechanical working life	10^6 operations
Electrical working life	10^5 operations
Protection degree	IP 00 (see pages 18-20 for protection caps and connectors)
Weight	~ 70 g

请参阅Euroswitch20-03-1压力开关目录册，第11-15页的一般说明，以便正确使用。*For a correct use please refer to "General Notes" in the pressure switches Euroswitch catalogue 20-03-1, p. 11-15.*
本公司保留随时修改产品技术特征或停止生产的权利，恕不另行通知。*The Company reserves the right to modify the technical features of the products or halt production at any time without notice.*

357-357V

真空开关 ≤ 48V
VACUUM SWITCH ≤ 48V

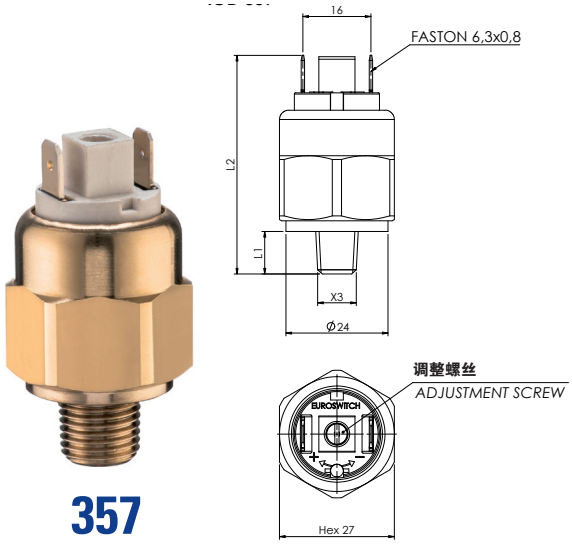

357

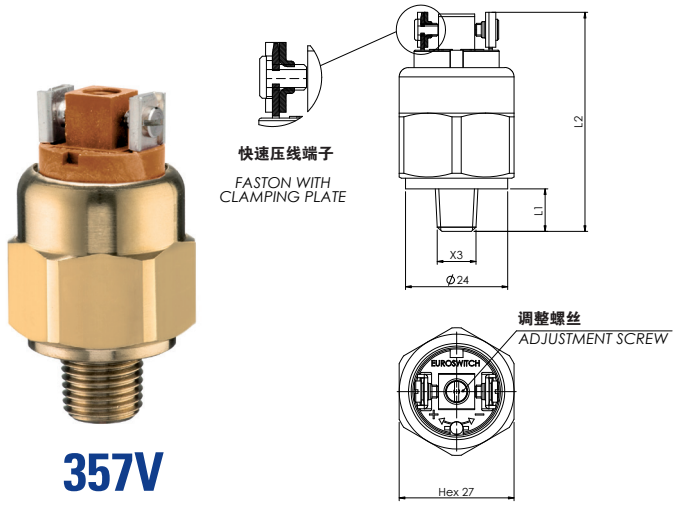

357V

代码 - *PART NUMBER*

型号 / Mod. 357														
电触点 - *electrical contact* 常开 *norm. open*						电触点 - *electrical contact* 常闭 *norm. closed*						设定范围 *Setting range* 巴 bar	20°C下的公差 *Tolerance at 20°C* 巴 bar
357(V)	1	1	●	■	0	**357(V)**	2	1	●	■	0	-50 / -500	± 50
357(V)	1	1	●	■	9	**357(V)**	2	1	●	■	9	-100 / -900	± 100

(V) = 快速压线端子 / *faston with clamping plate*

● 螺纹 (X3)	*Threads (X3)*	L1	L2 (mm)	■ 膜片（见17页）	*Diaphragms* (see page 17)
1 1/8" Gas 圆锥	***1*** *1/8" Gas conical*	10	53	**2** FKM	***2*** *FKM*
2 1/4" Gas 圆锥	***2*** *1/4" Gas conical*	12	55	**3** EPDM CH	***3*** *EPDM CH*
3 M10x1 圆锥	***3*** *M10x1 conical*	10	53	**6** HNBR (标准)	***6*** *HNBR (standard)*

机体	黄铜 （可要求不锈）
电触点	镀银 AgNi（可要求镀金）
电流状态	常开（本色）常闭（赭色）
最大开关电压	48 V交流/直流
最大开关电流	0.5A（可要求2A）
液体最高温度	80°至120°C（根据膜片）
最大超压限制	15 巴
最大工作压力	10 巴
启动条件	1B
机械工作寿命	10^6 活塞版本
电气工作寿命	10^5 活塞版本
防护等级	IP00（见 18-20页保护盖和连接器）
重量	~ 90 g

Case	Brass (inox on request)
Electric contacts	Silver AgNi, (gold plated on request)
Electrical connection	N.O. (natural color) N.C. (ochre)
Max switch voltage	48V ac / dc
Max switch current	0,5A (2A on request)
Max fluid temperature	80°-120°C (depending on diaphragm)
Max Overpressure limit	15 bar
Max Working pressure	10 bar
Action type	1B
Mechanical working life	10^6 operations
Electrical working life	10^5 operations
Protection degree	IP 00 (see pages 18-20 for protection caps and connectors)
Weight	~ 90 g

请参阅Euroswitch20-03-1压力开关目录册，第11-15页的一般说明，以便正确使用。*For a correct use please refer to "General Notes" in the pressure switches Euroswitch catalogue 20-03-1, p. 11-15.*

本公司保留随时修改产品技术特征或停止生产的权利，恕不另行通知。*The Company reserves the right to modify the technical features of the products or halt production at any time without notice.*

377-377V

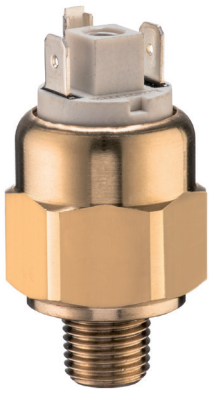

377

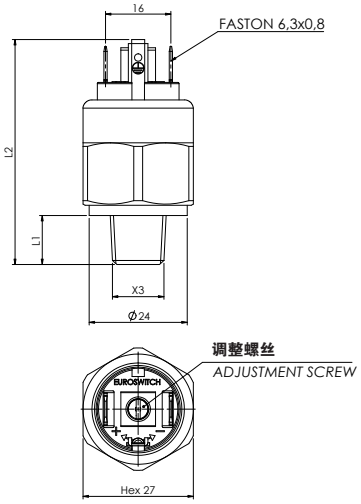

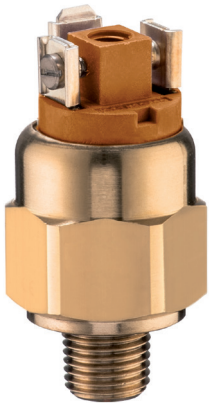

377V

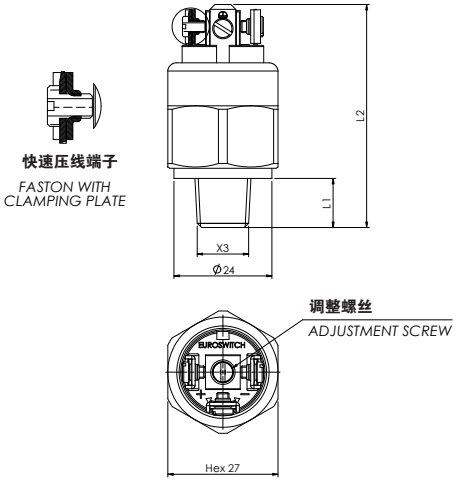

代码 - *PART NUMBER*

型号 / Mod. 377												设定范围 *Setting range* 巴 bar	20°C下的公差 *Tolerance at 20°C* 巴 bar
电触点 - *electrical contact* 常开 *norm. open*						电触点 - *electrical contact* 常闭 *norm. closed*							
377(V)	1	1	●	■	0	**377(V)**	2	1	●	■	0	-50 / -500	± 50
377(V)	1	1	●	■	9	**377(V)**	2	1	●	■	9	-100 / -900	± 100

(V) = 快速压线端子 / *faston with clamping plate*

● **螺纹 (X3)**	***Threads (X3)***	**L1**	**L2 (mm)**
1 1/8" Gas 圆锥	***1*** *1/8" Gas conical*	10	53
2 1/4" Gas 圆锥	***2*** *1/4" Gas conical*	12	55
3 M10x1 圆锥	***3*** *M10x1 conical*	10	53

■ **膜片（见17页）**	***Diaphragms*** *(see page 17)*
2 FKM	***2*** *FKM*
3 EPDM CH	***3*** *EPDM CH*
6 HNBR (标准)	***6*** *HNBR (standard)*

机体	黄铜 （可要求不锈）
电触点	镀银 AgNi（可要求镀金）
电流状态	常开（本色）常闭（赭色）
最大开关电压	250V
最大开关电流	0,5A
液体最高温度	80°至120°C（根据膜片）
最大超压限制	15 巴
最大工作压力	10 巴
启动条件	1B
机械工作寿命	10^6 活塞版本
电气工作寿命	10^5 活塞版本
防护等级	IP00（见 18-20页保护盖和连接器）
重量	~ 90 g

Case	Brass (inox on request)
Electric contacts	Silver AgNi, (gold plated on request)
Electrical connection	N.O. (natural color) N.C. (ochre)
Max switch voltage	250V
Max switch current	0,5A
Max fluid temperature	80°-120°C (depending on diaphragm)
Max Overpressure limit	15 bar
Max Working pressure	10 bar
Action type	1B
Mech.anical working life	10^6 operations
Electrical working life	10^5 operations
Protection degree	IP 00 (see pages 18-20 for protection caps and connectors)
Weight	~ 90 g

请参阅Euroswitch20-03-1压力开关目录册，第11-15页的一般说明，以便正确使用。*For a correct use please refer to "General Notes" in the pressure switches Euroswitch catalogue 20-03-1, p. 11-15.*
本公司保留随时修改产品技术特征或停止生产的权利，恕不另行通知。*The Company reserves the right to modify the technical features of the products or halt production at any time without notice.*

387

膜片真空开关 - SPDT 触点
DIAPHRAGM VACUUM SWITCH - SPDT CONTACTS

可按要求提供认证版本 ATEX / IECEX
Version ATEX / IECEX available on request

可按要求提供认证版本 *UL 508 FILE N° E478896 CSA C22.2.NO.14-13*
Version UL 508 FILE N° E478896 CSA C22.2.NO.14-13 available on request

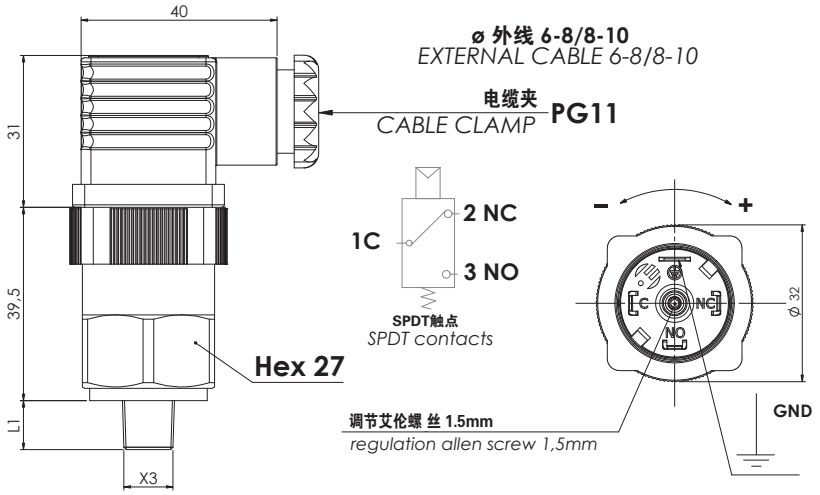

代码 - *PART NUMBER*	设定范围 *Setting range* 巴 bar	20°C下的公差 *Tolerance at 20°C* 巴 bar
387 2 1 ● 6 0	-150 / - 500	± 50
387 2 1 ● 6 9	-200 / - 900	± 100

● 螺纹 (X3)	*Threads (X3)*	L2 (mm)	■ 膜片（见17页）	*Diaphragms (see page 17)*
1 1/8" Gas 圆锥	***1*** *1/8" Gas conical*	10	**1** NBR (标准)	***1*** *NBR (standard)*
2 1/4" Gas 圆锥	***2*** *1/4" Gas conical*	12	**2** FKM	***2*** *FKM*
G 1/8" Gas 圆柱	***G*** *1/8" Gas cylindrical*	10	**3** EPDM CH	***3*** *EPDM CH*
H 1/4" Gas 圆柱	***H*** *1/4" Gas cylindrical*	12	**4** CR	***4*** *CR*
			6 HNBR	***6*** *HNBR*

UL CSA 版本在代码末尾添加 U。示例：: 387 21 ▲●■U
*For **UL CSA** version add **U** at the end of the code Example: 387 21 ▲●■ U*

机体	黄铜		**Case**	Brass	
电触点	镀银		**Electric contacts**	Silver	
调整螺丝	调节螺丝 1.5mm		**Regulation screw**	Allen Key 1,5 mm	
液体最高温度	80°至120°C（根据膜片） UL CSA 版本 85°C		**Max fluid temperature**	80° to 120°C depending on diaphragm UL/CSA version 85°C	
电流状态	SSPDT触点		**Electrical condition**	SPDT (exchange contact)	
电气特性	5 (4) A / 14 Vdc	**UL CSA 版本**	**Electrical characteristics**	5 (4) A / 14 Vdc	**UL CSA Version**
	4 (3) A / 30 Vdc	3 A / 30 Vdc		4 (3) A / 30 Vdc	3 A / 30 Vdc
	5 (3) A / 125 Vac	3 A / 125 Vac		5 (3) A / 125 Vac	3 A / 125 Vac
	3 (2) A / 250 Vac	3 (3) A / 250 Vac		3 (2) A / 250 Vac	3 (3) A / 250 Vac
最大超压限制	15 巴	15 巴	**Max Overpressure limit**	15 bar	15 bar
最大工作压力	10 巴	2,5 巴	**Max Working pressure**	10 bar	2,5 bar
固定迟滞	大约 0,15 巴		**Fixed Hysteresis**	about 0,15 bar	
启动条件	1B		**Action type**	1B	
机械工作寿命	10^6 活塞版本		**Mechanical working life**	10^6 operations	
最大扭力	25 Nm		**Tightening torque max**	25 Nm	
防护等级	IP65 (见18-20页)		**Protection degree**	IP65 (see pages 18-20)	
根据 UNI EN 175301-803 (DIN43650) 带连接器			with connector according to UNI EN 175301-803 (DIN43650)		
重量	~ 140 g		**Weight**	~ 140 g	

请参阅Euroswitch20-03-1压力开关目录册，第11-15页的一般说明，以便正确使用。*For a correct use please refer to "General Notes" in the pressure switches Euroswitch catalogue 20-03-1, p. 11-15.*
本公司保留随时修改产品技术特征或停止生产的权利，恕不另行通知。*The Company reserves the right to modify the technical features of the products or halt production at any time without notice.*

压差堵塞指示器
Differential clogging indicators

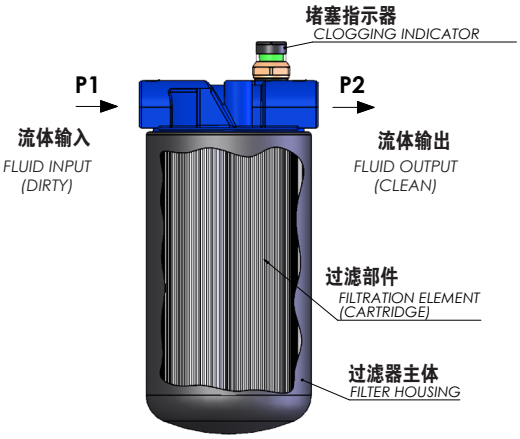

压差堵塞指示器通常用于检测液压系统中的过滤器堵塞。
标准型号的开关值可在工厂调节，压差范围 1-10 bar。
最大压差为 400 bar，最大压力为 700 bar。
可提供视觉、电气或电子指示。
定制版可根据客户要求生产，例如，可提供完全有线版本，使用任何类型的电缆和最高 IP69K 的连接器、不同的工艺连接及不锈钢外壳。

The differential clogging Indicators are normally used to detect filter clogging in hydraulic systems.
The switching value, for the standard model, can be adjusted in factory the differential pressure range 1-10 bar.
The maximum differential pressure is 400 bar with a maximum pressure of 700 bar.
Are available with visual, electrical or electronic indic ation.
Customised version are manufactured on request, for example they can be supplied fully wired with any type of cables and connector with up to IP69K, with different connection to the process, with stainless steel case.

本公司保留随时修改产品技术特征或停止生产的权利，恕不另行通知。*The Company reserves the right to modify the technical features of the products or halt production at any time without notice.*

I电压差指示器
ELECTRICAL DIFFERENTIAL PRESSURE INDICATOR

可按要求提供认证版本 ATEX / IECEX
Version ATEX / IECEX available on request

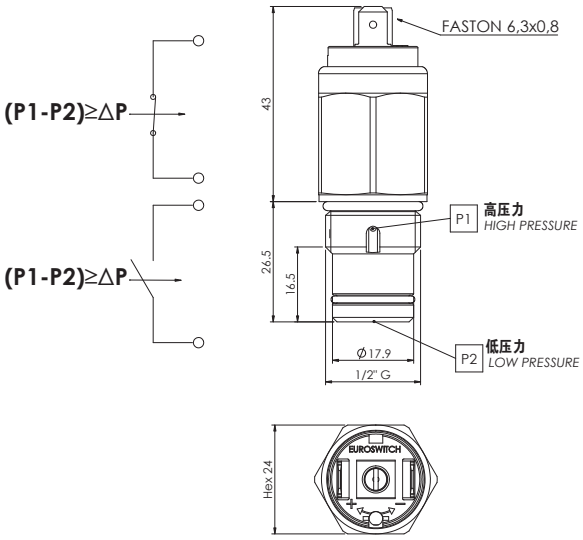

按要求反向操作
REVERSE OPERATION ON REQUEST

Δ 压力 - *Pressure*	下的公差 - *Tolerance*
1,3 Bar	+/- 15%
2 Bar	+/- 10%
2,5 Bar	+/- 10%
3 Bar	+/- 10%
3,5 Bar	+/- 10%
5 Bar	+/- 10%
8 Bar	+/- 10%

也可按要求提供其他压差值 - *Other differential pressure values are also available on request.*

介质	油–空气
机体	黄铜
电触点	镀银
液体最高温度	100°C
电流状态	N.A. - N.C.
最大开关电压	48 V ac / dc
最大开关电流	0,5 A
启动条件	1B
最大工作压力	350 ÷ 450 巴 （根据螺纹不同）
螺纹	1/2" Gas 标准（可根据要求订制）
最大扭力	50-70 Nm
防护等级	IP00（见 18-20页保护盖和连接器）
重量	~ 120 g

Medium	Oil - Air
Case	Brass
Electric contact	Silver
Max fluid temperature	100°C
Electrical conditions	N.O. - N.C.
Max switches voltage	48 V ac / dc
Max switches current	0,5 A
Action type	1B
Max working pressure	350 ÷ 450 bar (depending on the thread)
Thread	1/2" Gas standard (others on request)
Tightening torque	50-70 Nm
Protection degree	IP 00 (see pages 18-20 for protection caps and connectors)
Weight	~ 120 g

请参阅Euroswitch20-03-1压力开关目录册，第11-15页的一般说明，以便正确使用。*For a correct use please refer to "General Notes" in the pressure switches Euroswitch catalogue 20-03-1, p. 11-15.*
本公司保留随时修改产品技术特征或停止生产的权利，恕不另行通知。*The Company reserves the right to modify the technical features of the products or halt production at any time without notice.*

电压差指示器 - SPDT 触点
ELECTRICAL DIFFERENTIAL PRESSURE INDICATOR WITH SPDT CONTACTS

可按要求提供认证版本 ATEX / IECEX
Version ATEX / IECEX available on request

可按要求提供认证版本 *UL 508 FILE N° E478896 CSA C22.2.NO.14-13*
Version UL 508 FILE N° E478896 CSA C22.2.NO.14-13 available on request

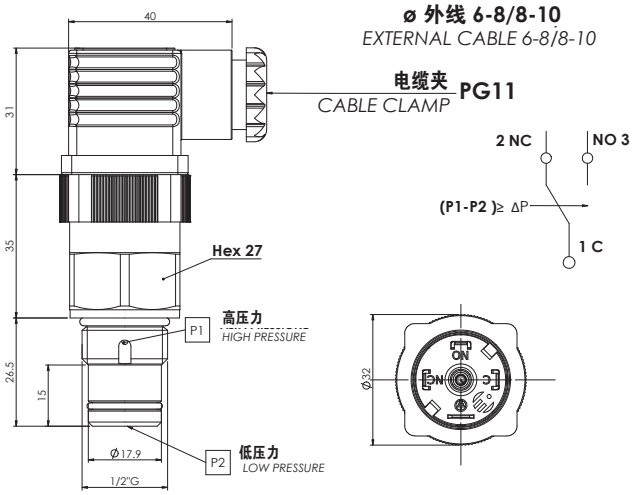

Δ 压力 - *Pressure*	下的公差 - *Tolerance*
1,3 Bar	+/- 15%
2 Bar	+/- 10%
2,5 Bar	+/- 10%
3 Bar	+/- 10%
3,5 Bar	+/- 10%
5 Bar	+/- 10%
8 Bar	+/- 10%

也可按要求提供其他压差值 - *Other differential pressure values are also available on request.*

介质	油–空气	
机体	黄铜	
电触点	镀银	
液体最高温度	100°C - UL CSA 版本 85°C	
电流状态	SPDT触点	
电气特性	5 (4) A / 14 Vdc	**UL CSA 版本**
	4 (3) A / 30 Vdc	3 A / 30 Vdc
	5 (3) A / 125 Vac	3 A / 125 Vac
	3 (2) A / 250 Vac	3 (3) A / 250 Vac
启动条件	1B	
最大工作压力	450 巴	350 巴
	（根据螺纹不同）	
螺纹	1/2" Gas 标准 （可根据要求订制）	
最大扭力	50-70 Nm	
防护等级	IP65	
根据 UNI EN 175301-803 (DIN43650) 带连接器		
重量	~ 160 g	

Medium	Oil - Air	
Case	Brass	
Electric contact	Silver	
Max fluid temperature	100°C - UL/CSA version 85°C	
Electrical conditions	SPDT (exchange contact)	
Electrical features	5 (4) A / 14 Vdc	**UL CSA Version**
	4 (3) A / 30 Vdc	3 A / 30 Vdc
	5 (3) A / 125 Vac	3 A / 125 Vac
	3 (2) A / 250 Vac	3 (3) A / 250 Vac
Action type	1B	
Max working pressure	450 bar	350 bar
	depending on the thread	
Thread	1/2" Gas standard (others on request)	
Tightening torque	50-70 Nm	
Protection degree	IP65	
with connector according to UNI EN 175301-803 (DIN43650)		
Weight	~ 160 g	

请参阅Euroswitch20-03-1压力开关目录册，第11-15页的一般说明，以便正确使用。*For a correct use please refer to "General Notes" in the pressure switches Euroswitch catalogue 20-03-1, p. 11-15.*
本公司保留随时修改产品技术特征或停止生产的权利，恕不另行通知。*The Company reserves the right to modify the technical features of the products or halt production at any time without notice.*

带旋转系统的电压差指示器
ELECTRICAL DIFFERENTIAL PRESSURE INDICATOR WITH ROTATING SYSTEM

可按要求提供认证版本 *UL 508 FILE N° E478896 CSA C22.2.NO.14-13*
Version UL 508 FILE N° E478896 CSA C22.2.NO.14-13 available on request

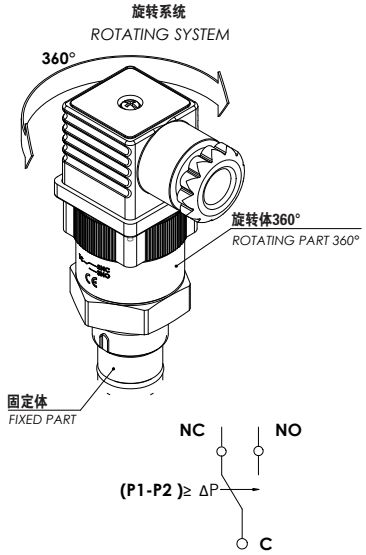

按要求反向操作
REVERSE OPERATION ON REQUEST

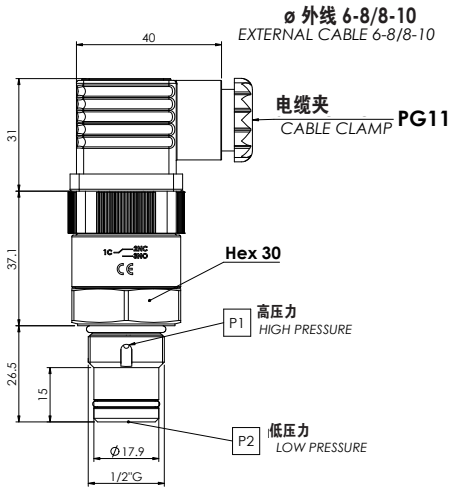

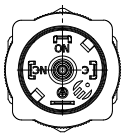

Δ 压力 - *Pressure*	下的公差 - *Tolerance*
1,3 Bar	+/- 15%
2 Bar	+/- 10%
2,5 Bar	+/- 10%
3 Bar	+/- 10%
3,5 Bar	+/- 10%
5 Bar	+/- 10%
8 Bar	+/- 10%

也可按要求提供其他压差值 - *Other differential pressure values are also available on request.*

介质	油–空气	
机体	黄铜	
电触点	镀银	
液体最高温度	100°C - UL CSA 版本 85°C	
电流状态	SPDT触点	
电气特性	5 (4) A / 14 Vdc	**UL CSA 版本**
	4 (3) A / 30 Vdc	3 A / 30 Vdc
	5 (3) A / 125 Vac	3 A / 125 Vac
	3 (2) A / 250 Vac	3 (3) A / 250 Vac
启动条件	1B	
最大工作压力	450 巴	350 巴
	（根据螺纹不同）	
螺纹	1/2" Gas 标准 （可根据要求订制）	
最大扭力	50-70 Nm	
防护等级	IP65	
根据 UNI EN 175301-803 (DIN43650) 带连接器		
重量	~ 160 g	

Medium	Oil - Air	
Case	Brass	
Electric contact	Silver	
Max fluid temperature	100°C - UL/CSA version 85°C	
Electrical conditions	SPDT (exchange contact)	
Electrical features	5 (4) A / 14 Vdc	**UL CSA Version**
	4 (3) A / 30 Vdc	3 A / 30 Vdc
	5 (3) A / 125 Vac	3 A / 125 Vac
	3 (2) A / 250 Vac	3 (3) A / 250 Vac
Action type	1B	
Max working pressure	450 bar	350 bar
	depending on the thread	
Thread	1/2" Gas standard (others on request)	
Tightening torque	50-70 Nm	
Protection degree	IP65	
with connector according to UNI EN 175301-803 (DIN43650)		
Approx. weight	~ 160 g	

请参阅Euroswitch20-03-1压力开关目录册，第11-15页的一般说明，以便正确使用。*For a correct use please refer to "General Notes" in the pressure switches Euroswitch catalogue 20-03-1, p. 11-15.*
本公司保留随时修改产品技术特征或停止生产的权利，恕不另行通知。*The Company reserves the right to modify the technical features of the products or halt production at any time without notice.*

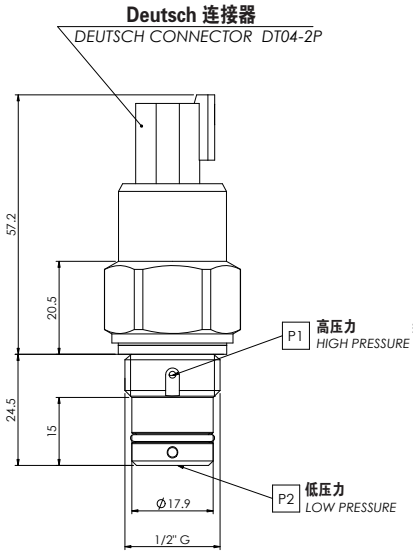

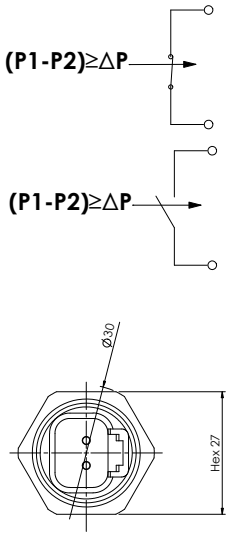

按要求反向操作
REVERSE OPERATION ON REQUEST

Δ 压力 - *Pressure*	下的公差 - *Tolerance*
1,3 Bar	+/- 15%
2 Bar	+/- 10%
3 Bar	+/- 10%
5 Bar	+/- 10%

也可按要求提供其他压差值
Other differential pressure values are also available on request

介质	油–空气
机体	黄铜
液体最高温度	100°C
电流状态	Reed SPST (N.A./N.C.)
最大开关电压	48 V ac / dc
最大开关电流	0.4A
最大开关电容	10 W
启动条件	1B
最大工作压力	100÷250 巴 （根据螺纹不同）
螺纹	1/2" Gas（可根据要求订制）
最大扭力	25 Nm
连接器	Deutsch DT 04-2P（可根据要求订制）
防护等级	IP 67

Medium	Oil - Air
Case	Brass
Max fluid temperature	100°C
Electrical conditions	Reed SPST (N.O./N.C.)
Max switched voltage	48 V ac / dc
Max switched corrent	0,4 A
Max switched capacity	10 W
Action type	1B
Max workong pressure	100 ÷ 250 bar depending on process connection
Thread	1/2" Gas (others on request)
Tightening torque	25 Nm
Connector	Deutsch DT 04-2P (others on request)
Protection degree	IP 67

请参阅Euroswitch20-03-1压力开关目录册，第11-15页的一般说明，以便正确使用。*For a correct use please refer to "General Notes" in the pressure switches Euroswitch catalogue 20-03-1, p. 11-15.*
本公司保留随时修改产品技术特征或停止生产的权利，恕不另行通知。*The Company reserves the right to modify the technical features of the products or halt production at any time without notice.*

83T

I带温控的电压差指示器
ELECTRICAL DIFFERENTIAL PRESSURE INDICATOR WITH THERMOSTAT

■ 意大利专利 / *Italian Patent* n. 1420225

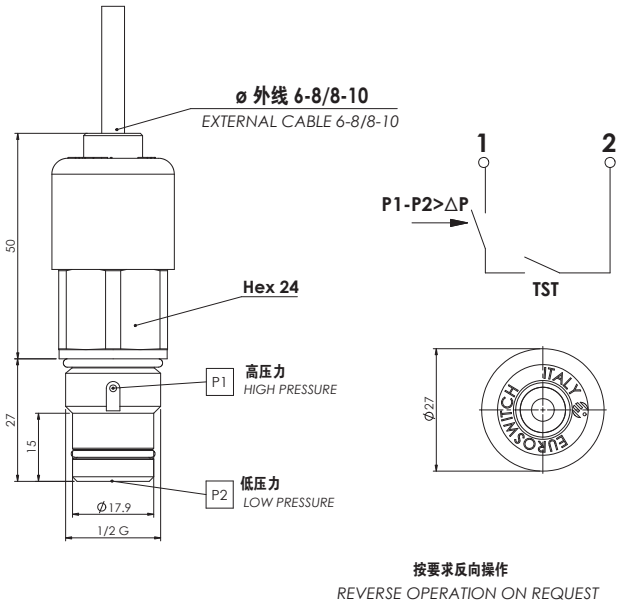

Δ 压力 - *Pressure*	下的公差 - *Tolerance*
1,3 Bar	+/- 15%
2 Bar	+/- 10%
3 Bar	+/- 10%
5 Bar	+/- 10%

也可按要求提供其他压差值
Other differential pressure values are also available on request

介质	油–空气
机体	黄铜
液体最高温度	100°C
电流状态	Reed SPST (N.A./N.C.)
最大开关电压	48 V ac / dc
最大开关电流	0.4A
最大开关电容	10 W
启动条件	1B
最大工作压力	350÷450 巴 根据螺纹不同
最大扭力	50-70 Nm
电气连接	按要求提供其他电缆和连接器
螺纹	1/2" Gas (可根据要求订制)
防护等级	IP 67

Medium	Oil - Air
Case	Brass
Max fluid temperature	100°C
Electrical condition	Reed SPST (N.O./N.C.)
Max switched voltage	48 V ac / dc
Max switched corrent	0,4 A
Max switched capacity	10 W
Action type	1B
Max workong pressure	350÷450 bar depending on process connection
Tightening torque	50-70 Nm
Electrical connection	W ires and connector on request
Thread	1/2" Gas (others on request)
Protection degree	IP 67

请参阅Euroswitch20-03-1压力开关目录册，第11-15页的一般说明，以便正确使用。*For a correct use please refer to "General Notes" in the pressure switches Euroswitch catalogue 20-03-1, p. 11-15.*
本公司保留随时修改产品技术特征或停止生产的权利，恕不另行通知。*The Company reserves the right to modify the technical features of the products or halt production at any time without notice.*

温度-压力开关
THERMO-PRESSURE SWITCH

700

■ **欧洲专利**
European Patent

■ **美国专利 No. 8,087,592**
U.S. Patent No. 8,087,592

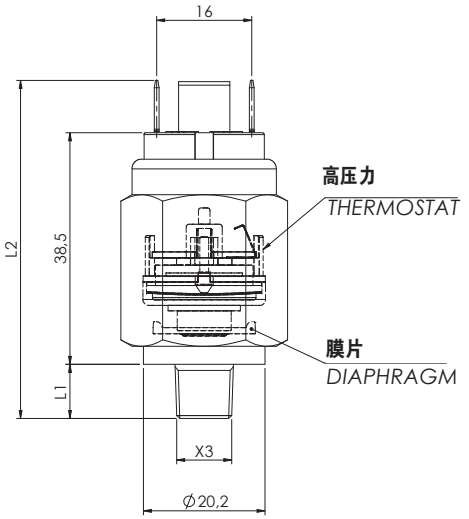

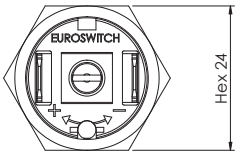

P700该温度压力开关由具有 NO 或 NC 触点的可调膜片式压力开关和内置固定设置的双金属恒温器组成，其触点与压力开关的触点相连。NC 触点并联，NO 触点串联。
该装置的设计目的是几乎同时测量流体相对于设定值的温度和压力。
适用于各种液压回路以及液压过滤器，避免了低温启动典型的误报警。

Model P700 *is comprised of an adjustable diaphragm* ***pressure switch****, with NO or NC contacts, and a built-in fixed-setting bimetal* ***thermostat****, the contact of which is linked to that of the pressure switch. NC contacts are connected in parallel, NO contacts in series.*
The device is designed to measure, virtually simultaneously, the ***temperature*** *and* ***pressure*** *of a fluid in relation to set values.*
It is intended for use in hydraulic circuits of various kinds, and in hydraulic filters it avoids the false alarms typical of low-temperature start-up.

机体	镀锌钢
电触点	镀银 AgNi
最大开关电压	48 Vac - a richiesta 250 Vac
最大开关电流	0,5 (0,2) A
液体最高温度	100°C
机械工作寿命	10^5 (1-10 巴)
电气工作寿命	10^5
启动条件	1B
最大扭力	30 Nm
防护等级	IP00 (见 16-17页)
螺纹	M12x1,5 (如需定制其他紧固版本请联系Euroswitch公司)
常开（紫色）常闭（蓝色）压力开关	
转换压力	Tarato in Euroswitch (Range 1-10 bar)
最大超压限制	30 巴
膜片	HNBR (contattare Euroswitch per altri materiali)
常开/常闭恒温器	
启动温度	30° C +/- 5K differenziale 10/15 K
温度变化频率	1/2 K/min
重量	~ 75 g

Case	Zinc plated steel
Electrical contacts	Silver AgNi
Max switching voltage	48 Vac - 250 Vac on request
Max switching current	0,5 (0,2) A
Max fluid temperature	100°C
Mechanical working life	10^5 (1-10 bar)
Electrical working life	10^5
Action type	1B
Tightening torque max	30 Nm
Protection degree	IP00 (see pages 16-17)
Thread	M12x1,5 (contact Euroswitch for other thread)
NO (Bordeaux) / NC (BLUE) PRESSURE SWITCHES	
Switching pressure	Setted in Euroswitch (Range 1-10 bar)
Max overpressure limit	30 bar
Diaphragm	HNBR (contact Euroswitch for other material)
NO / NC TEMPERATURE SWITCHES	
Switching temperature :	30° C +/- 5K differential 10/15 K
Temperature change rate :	1/2 K/min
Weight	~ 75 g

请参阅Euroswitch20-03-1压力开关目录册，第11-15页的一般说明，以便正确使用。*For a correct use please refer to "General Notes" in the pressure switches Euroswitch catalogue 20-03-1, p. 11-15.*
本公司保留随时修改产品技术特征或停止生产的权利，恕不另行通知。*The Company reserves the right to modify the technical features of the products or halt production at any time without notice.*

目视压差指示器 HEX 30
HEX 30 OPTICAL DIFFERENTIAL PRESSURE INDICATOR

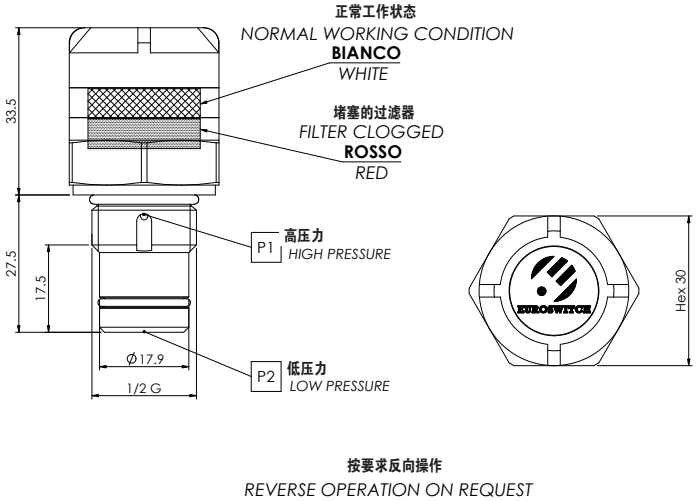

Δ 压力 - *Pressure*	下的公差 - *Tolerance*
1,3 Bar	+/- 15%
2 Bar	+/- 10%
2,5 Bar	+/- 10%
5 Bar	+/- 10%

也可按要求提供其他压差值 - *Other differential pressure values are also available on request.*

介质	油–空气
机体	黄铜
盖子	高性能聚酰胺
光信号	白色/红色
螺纹	G 1/2”（可根据要求订制）
室温	-25°C / +85°C
流体温度	-10°C / +85°C
最大工作压力	350 ÷ 450 巴 根据螺纹不同
启动条件	磁
最大扭力	50-70 Nm
启动速度	10 bar / 15 sec.
重量	~ 150 g

Medium	Oil - Air
Case	Brass
Cap	high performance Polyamid
Visual signal	White/Red
Thread	G 1/2” (other on request)
Ambient temperature	-25°C / +85°C
Fluid temperature	-10°C / +85°C
Max working pressure	350 ÷ 450 bar depending on the thread
Action type	magnetic
Tightening torque	50-70 Nm
Operating speed	10 bar / 15 sec.
Weight	~ 150 g

请参阅Euroswitch20-03-1压力开关目录册，第11-15页的一般说明，以便正确使用。*For a correct use please refer to “General Notes” in the pressure switches Euroswitch catalogue 20-03-1, p. 11-15.*
本公司保留随时修改产品技术特征或停止生产的权利，恕不另行通知。*The Company reserves the right to modify the technical features of the products or halt production at any time without notice.*

目视压差指示器 HEX 24
HEX 24 OPTICAL DIFFERENTIAL PRESSURE INDICATOR

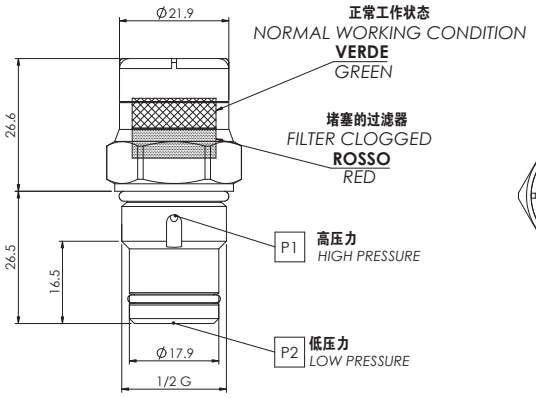

P1 高压力 / High Pressure P2 低压力/Low Pressure	
Δ 压力 - *Pressure*	下的公差 - *Tolerance*
1,3 Bar	+/- 15%
2 Bar	+/- 10%
2,5 Bar	+/- 10%
3 Bar	+/- 10%
5 Bar	+/- 10%

也可按要求提供其他压差值 - *Other differential pressure values are also available on request.*

介质	油-空气
机体	黄铜
盖子	高性能聚酰胺
光信号	绿色/红色
螺纹	G 1/2" （可根据要求订制）
室温	-25°C / +80°C
流体温度	-30°C / +100°C
最大工作压力	350 ÷ 450 巴 根据螺纹不同
启动条件	磁
最大扭力	50-70 Nm (in funzione dell'attacco a processo)
启动速度	10 bar / 15 sec.
重量	~ 100 g

Medium	Oil - Air
Case	Brass
Cap	high performance Polyamid
Visual signal	Green/Red
Thread	G 1/2" (other on request)
Ambient temperature	-25°C / +80°C
Fluid temperature	-30°C / +100°C
Max working pressure	350 ÷ 450 bar depending on the thread
Action type	magnetic
Tightening torque	50-70 Nm (depending on the thread)
Operating speed	10 bar / 15 sec.
Weight	~ 100 g

请参阅Euroswitch20-03-1压力开关目录册，第11-15页的一般说明，以便正确使用。*For a correct use please refer to "General Notes" in the pressure switches Euroswitch catalogue 20-03-1, p. 11-15.*

本公司保留随时修改产品技术特征或停止生产的权利，恕不另行通知。*The Company reserves the right to modify the technical features of the products or halt production at any time without notice.*

980

4-20 mA电子差压变送器
4-20 mA ELECTRONICAL DIFFERENTIAL TRANSMITTER

可按要求提供认证版本 ATEX
Version ATEX available on request

可按要求提供认证版本 *UL 508 FILE N° E478896 CSA C22.2.NO.14-13*
Version UL 508 FILE N° E478896 CSA C22.2.NO.14-13 available on request

- 意大利专利 / *Italian Patent* n. 1417212
- 欧洲专利 / *European Patent* n. 2796845
- 美国专利 / *USA Patent* n. 9,423,314 B2

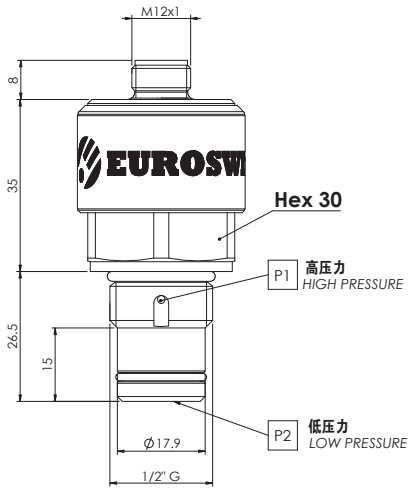

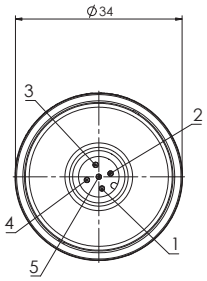

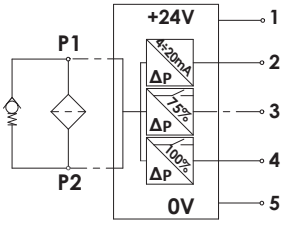

使用	工业应用	**Use**	Industrial applications
Pin1	电压24 V±10%	**Pin1**	Power supply 24 V±10%
Pin2	模拟输出范围 4÷20mA (见注意1和见注意2)	**Pin2**	Analogue Output 4÷20mA (see note 1 and note 2)
Pin3	75%的数字输出1开始标定 FS - PNP - 最大负荷 0,2A-NO (见注意 2)	**Pin3**	Digital output 1 calibrated at 75%-PNP-Max Load 0,2A-NO (see note 2)
Pin4	100%的数字输出2开始标定 FS - PNP - 最大负荷 0,2A-NO (见注意 2)	**Pin4**	Digital output 2 calibrated at 100%-PNP-Max Load 0,2A-NO (see note 2)
Pin5	0V - GND	**Pin5**	0V - GND
注意1：输入≥ FS的25% 如果输入≤ FS的25% 模拟输出是4 mA恒定的		**Note 1** For input ≥25%FS; For input<25%FS Analogue signal output is costant at 4mA	
注意2：25°C 精度 = 最大FS的±5% 热漂移（范围 T*÷70°C）= FS的± 6% 最大		**Note 2** Accuracy at 25° max±5% FS; Thermal drift (range T*÷70°C) max ±6% FS	
时间	启动时间= 3s 响应时间：模拟输出~0.2s, 数字输出~0.1s	**Time**	Activation time = 3s; Response time: Analog Out ~0.2s, Digital Out ~0.1s
热损耗	T*= 20°C±2° （根据要求温度值可调节）	**Thermal Lock Out**	T*= 20°C±2° (others on request)
注意：如果T<T*: 数字输出1NO，数字输出2NO，模拟输出：3mA		Note: if T<T*: digital Out.1 NO, digital Out.2 NO, Analogue Out: 3mA	
介质	油–空气	**Medium**	Oil -Air
机体	黄铜 (AISI 可要求)	**Case**	Brass (AISI on request)
工作温度范围	-20°C ÷ +80°C	**Working temperature range**	-20°C ÷ +80°C
测量范围 **(差压)**	2 ÷ 8 巴	**Measuring ranges** **(Differential pressure)**	2 ÷ 8 bar
机械工作寿命	10^5 活塞版本	**Mechanical working life**	10^5 cycles
最大工作压力	350 ÷450 巴 (350 UL CSA 版本) 根据螺纹不同	**Max working pressure**	350 ÷ 450 bar (350 UL CSA version) depending on the thread
螺纹	1/2" Gas (可根据要求订制)	**Thread**	1/2" Gas (others on request)
最大扭力	50-70 Nm	**Tightening torque**	50-70 Nm
连接器	M12 x 5 PIN	**Connector**	M12 x 5 PIN
防护等级	IP67	**Protection degree**	IP67
重量	~ 140 g	**Weight**	~ 140 g

PIN 3和4的输出值以及相对迟滞，可以在Euroswitch公司里或通过SCD编程器进行编程（请参阅第61页）
PIN3 and PIN4 outputs, with the associated hysteresis values, are programmable at factory or by programmer SCD (see page 61).

有任何技术和应用需求，请联系我们的技术部 *For technical and application details contact our technical office.*
请参阅Euroswitch20-03-1压力开关目录册，第11-15页的一般说明，以便正确使用。*For a correct use please refer to "General Notes" in the pressure switches Euroswitch catalogue 20-03-1, p. 11-15.*
本公司保留随时修改产品技术特征或停止生产的权利，恕不另行通知。*The Company reserves the right to modify the technical features of the products or halt production at any time without notice.*

带 LED 电子压差指示器
ELECTRONICAL DIFFERENTIAL PRESSURE INDICATOR WITH LED

983

可按要求提供认证版本 *UL 508 FILE N° E478896 CSA C22.2.NO.14-13*
Version UL 508 FILE N° E478896 CSA C22.2.NO.14-13 available on request

■ 国际专利 / *International Patent*

可按要求提供认证版本 *Rina N ELE140418CS*
Version Rina N ELE140418CS available on request

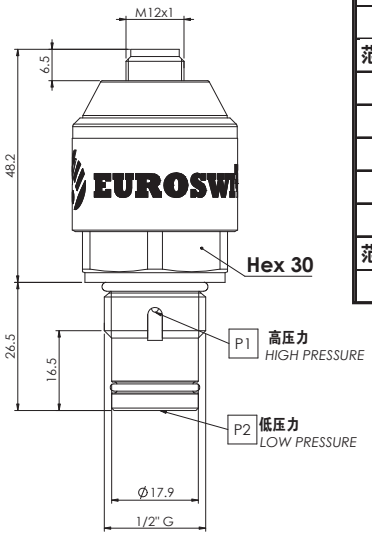

表格 Table 1: Visual Output		
If T>T* (TLO)		
范围 / Range (%FS)	color	
0÷50	绿色或闪烁绿色/green or flashing green (1Hz)	
50÷75	黄色或闪烁黄色/yellow or flashing yellow (1Hz)	
75÷100	橙色或闪烁橙色/orange or flashing orange (1Hz)	
>100	红色或闪烁绿色/red or flashing green (1Hz)	
If T<T* (TLO)		
范围 / Range (%FS)	color	
0÷100	blue	

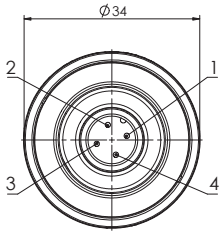

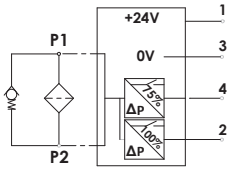

使用	工业应用
Pin1	电压24 V±10%
Pin2	100%的数字输出2开始标定 FS - PNP - 最大负荷 0,2A-NO
Pin3	0V - GND
Pin4	75%的数字输出1开始标定 FS - PNP - 最大负荷 0,2A-NO
时间	启动时间= 3s; 响应时间：模拟输出~0.4s
热损耗	T*= 20°C±2° （根据要求温度值可调节）
注意：如果T<T*: 数字输出1NO，数字输出2NO，蓝色	
精度/热漂移 **数字输出**	25°C 精度 = 最大FS的±5%（根据考虑的门槛） 热漂移（范围 T*÷70°C）= FS的 ± 6% 最大
介质	油-空气
机体	黄铜 (AISI可要求)
工作温度范围	-20°C ÷ +80°C
测量范围 **(差压)**	2 ÷ 8 巴
机械工作寿命	10^5 活塞版本
最大工作压力	350 ÷450 巴 (350 UL CSA 版本) 根据螺纹不同
螺纹	1/2" Gas (可根据要求订制)
最大扭力	50-70 Nm
连接器	M12 x 5 PIN
防护等级	IP67
重量	~ 140 g

Use	Industrial applications
Pin1	Power supply 24 V±10%
Pin2	Digital output 2 calibrated at 100%-PNP-Max Load 0,2A-NO
Pin3	0V - GND
Pin4	Digital output 1 calibrated at 75%-PNP-Max Load 0,2A-NO
Time	Activation time = 3s; Response time = ~0.4s
Thermal Lock Out	T*= 20°C±2° (others on request)
Note: : if T<T*: digital Out.1 NO, digital Out.2 NO, Color blue	
Accuracy/Thermal drift **Digital output**	Accuracy at 25° = max±5% (depending on the set point); Thermal drift (range T*÷70°C) = max ±6% FS
Medium	Oil -Air
Case	Brass (AISI on request)
Working temperature range	-20°C ÷ +80°C
Measuring ranges **(Differential pressure)**	2 ÷ 8 bar
Mechanical working life	10^5 cycles
Max working pressure	350 ÷ 450 bar (350 UL CSA version) depending on the thread
Thread	1/2" Gas (others on request)
Tightening torque	50-70 Nm
Connector	M12 x 5 PIN
Protection degree	IP67
Approx. weight	~ 140 g

PIN 3和4的输出值以及相对迟滞，可以在Euroswitch公司里或通过SCD编程器进行编程（请参阅第61页）
PIN3 and PIN4 outputs, with the associated hysteresis values, are programmable at factory or by programmer SCD (see page 61).

有任何技术和应用需求，请联系我们的技术部 *For technical and application details contact our technical office.*
请参阅Euroswitch20-03-1压力开关目录册，第11-15页的一般说明，以便正确使用。*For a correct use please refer to "General Notes" in the pressure switches Euroswitch catalogue 20-03-1, p. 11-15.*
本公司保留随时修改产品技术特征或停止生产的权利，恕不另行通知。*The Company reserves the right to modify the technical features of the products or halt production at any time without notice.*

987

IO-Link 电子压差变送器
IO-Link DIFFERENTIAL PRESSURE TRANSMITTER

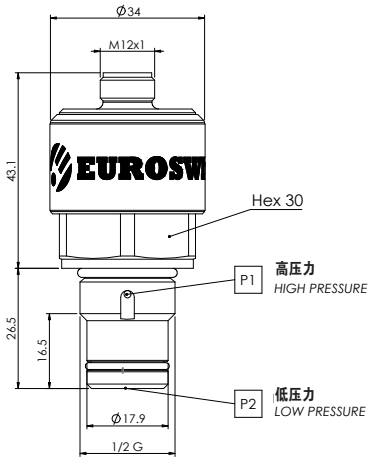

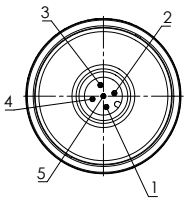

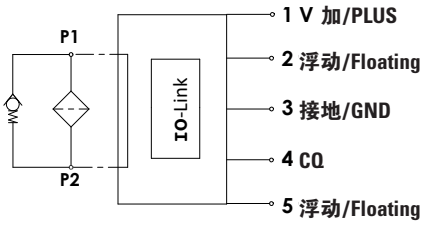

IO-Link

IO-Link是一种串行通信协议，它允许在传感器和主机之间进行双向数据交换，而主机又可以在不同的网络，现场总线或背板总线上传输数据，从而可以通过控制器，例如PLC或人机接口，立即使用数据或进行远期分析。 它是可兼容IO系统和现场设备之间的点对点通信协议。 由于其"开放标准"特性，这些设备几乎可以集成到任何现场总线或自动化系统中。 借助此协议，可以降低总体成本，提高流程效率并最大程度地提高机器可用性。

IO-Link *is a serial communication protocol, which enables the bi-directional exchange of data between sensors and the master, which in turn transmits data on networks, fieldbuses or different backplanes, making them accessible for use immediately, or to enable long-term analysis via a controller, e.g. a PLC or HM interface. Is a point-to-point communication protocol between a compatible IO system and a device in the field. Thanks to its 'open-standard' characteristics, devices can basically be integrated in any fieldbus or automation system. This protocol makes it possible to reduce total costs, increase the efficiency of processes, and maximise the availability of machines.*

使用	工业应用
Pin1	电压+24 V±10%
Pin3	0V - GND
Pin4	CQ
注意1：输入≥ **FS的25%**;输入≤25%FS时，输出恒定为0 bar	
注意2：**25°C** 精度 = 最大**FS的±5%**；热漂移（范围 T*÷70°C）= FS的 ± 6% 最大	
时间	启动时间= 3s 响应时间：~0.5s
热损耗	T*= 20°C±2°
注意：如果T <T *：NO，模拟输出：0 bar	
介质	油-空气
机体	黄铜 (AISI 可选)
工作温度范围	-20°C / +80°C
测量范围 (差压)	2 ÷ 8 巴
机械工作寿命	10^5 活塞版本
最大工作压力	350 ÷ 450 巴 根据螺纹不同
螺纹	1/2" Gas (根据要求温度值可调节)
最大扭力	50-70 Nm
连接器	M12 x 5 PIN
防护等级	IP67
重量	~ 140 g

Use	Industrial applications
Pin1	Power supply +24 V±10%
Pin3	0V - GND
Pin4	CQ
Note 1 For Input ≥25%FS; If Input<25%FS Analogue signal Output is costant 0 bar	
Note 2 Accuracy at 25° max±5%FS; Thermal drift (range T*÷70°C) max ±6% FS	
Time	Activatione time = 3s Response time = 0,5s
Thermal Lock Out	T*= 20°C±2°
Note: if T<T*: NO, Analogue Out: 0 bar	
Medium	Oil -Air
Case	Brass (AISI optional)
Working temperature range	-20°C / +80°C
Measuring ranges (Differential pressure)	2 ÷ 8 bar
Mechanical working life	10^5 cycles
Max working pressure	350 ÷ 450 bar depending on the thread
Thread	1/2" Gas (others on request)
Tightening torque	50-70 Nm
Connector	M12 x 5 PIN
Protection degree	IP67
Weight	~ 140 g

有任何技术和应用需求，请联系我们的技术部 *For technical and application details contact our technical office.*
请参阅Euroswitch20-03-1压力开关目录册，第11-15页的一般说明，以便正确使用。*For a correct use please refer to "General Notes" in the pressure switches Euroswitch catalogue 20-03-1, p. 11-15.*
本公司保留随时修改产品技术特征或停止生产的权利，恕不另行通知。*The Company reserves the right to modify the technical features of the products or halt production at any time without notice.*

SCD 4.0 - 传感器配置设备

SCD 4.0接口（传感器配置设备）允许用户直接对四种类型的传感器进行编程。 除了4-20 mA模拟输出外，还可以设置2个数字信号来设置压力、温度和液位的阈值。.

SCD 4.0 interface (Sensor Configurator Device) which allows the user to directly program four types of sensors. In addition to the analogue 4-20 mA output, 2 digital signals can be set for setting the pressure, temperature and level thresholds.

- 编程单元允许您读取和修改传感器的配置：
  - ESL液位传感器
  - EST / EST2温度传感器
  - 电子差压变送器980（4-20 mA输出）和983（带指示灯）。
- 无需额外的24V电源（仅USB电缆）
- 数字输出状态显示Led灯
- 免费接口软件“SCD.EXE”（用于Windows®操作系统，可从Euroswitch.it门户的保留区下载）：
  - 选择和设置数字输出
  - 开/关状态，迟滞和延迟时间
  - 模拟输出曲线管理 4-20 mA
  - 抑制温度设定
  - 过程参数和模拟输出监控
  - 管理“配方”以快速复制设置

- *The programming unit is used to read and change the sensor configuration:*
  - *ESL level sensor*
  - *EST / EST2 temperature sensor*
  - *Electronic differential pressure transmitter models 980 (4-20 mA output) and 983 (light signal).*
- *No need for additional 24V power supply (USB cable only)*
- *LED light for displaying the status of digital outputs*
- *SCD.EXE free interface software (for Windows®, downloadable from the reserved area of www.euroswitch.it website):*
  - *selection and setting of digital outputs*
  - *ON/OFF, hysteresis and delay time*
  - *management of the 4-20 mA analogue output curve*
  - *inhibition temperature setting*
  - *process parameter and analogue output monitoring*
  - *“recipe” processing for quick duplication of settings*

- 工作温度（-5 / + 45°C）
- 储存温度（-25 / + 50°C）
- 防护等级IP20
- 套件重量270克
- ABS“外壳”尺寸 LxHxP 112x62x32mm
- 附件包含3个连接电缆：USB-A / USB-B-D SUB 9 / M12x1 5个PIN（用于ESL，EST，980型号）-适配器M12 / M12（用于983型号）

- *Operating temperature (-5°C to +45°C)*
- *Storage temperature (-25°C to +50°C)*
- *Protection degree IP20*
- *Kit weight 270 g*
- *Dimensions of ABS crate 112x62x32mm WxHxD*
- *Accessories included: 3 connecting cables USB-A/USB-B-D SUB 9 / M12x1, 5 pins (for models. ESL, EST and 980) - M12/M12 adapter for model 983.*

压力传感器 / *Pressure transducers*

主要用途：
—气动
—液压
—压缩机
—农业机械
—建筑机械和车辆
—加工工业

通用技术特点：
—传感元件：陶瓷
—压力范围：—1÷9 …… 0÷600 [bar]
—输出信号：4-20 [mA]
—精度≤1%（满量程）(BSFL - IEC 61298 - 2)
（非线性 + 迟滞 + 重复性）
—电气连接：M12x1
—防护等级：IP 67
—G 1/4"工艺连接按照 DIN 3852-E

按要求定制版本

Main Applications:
- Pneumatic
- Hydraulic
- Air compressors
- Agricultural machinery
- Construction machinery and vehicles
- Process industry

General technical features:
- Sensor element : ceramic
- Measuring range : -1÷9 ……. 0÷600 [bar]
- Output signal : 4-20 [mA] 2-wires
- Accuracy ≤1% (Span) (BSFL - IEC 61298 - 2)
  (Non linearity + Hysteresis + Repeatability)
- Electrical process connection : M12x1
- Protection degree : IP 67
- Thread G 1/4" according to DIN 3852-E (others on request)

Custom versions on request

4-20mA ESP 压力传感器
4-20 mA PRESSURE TRANSDUCERS

ESP

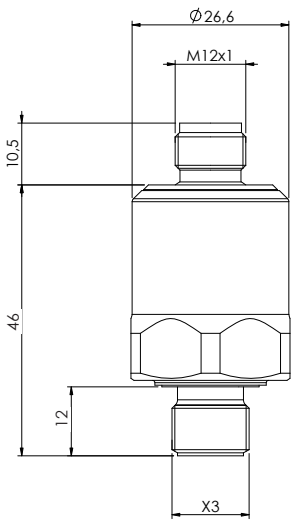

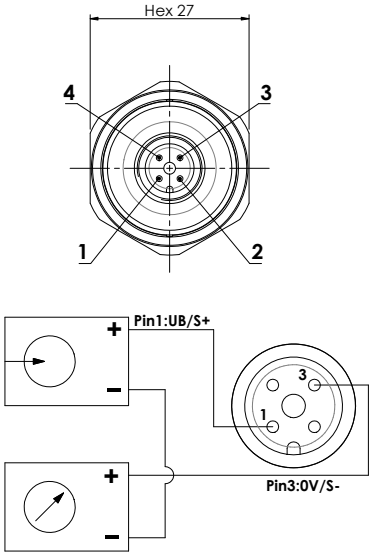

代码 *Part Number*	测量范围 (巴) *Measuring range (bar)*	最大工作压力 *Overload pressure*	最大超压限制 *Safety pressure*
ESP00202610V	-1 ÷ 9	20	35
ESP002026020	0 ÷ 2	4	8
ESP002026100	0 ÷ 10	20	35
ESP002026160	0 ÷ 16	40	60
ESP002026200	0 ÷ 20	60	100
ESP002026250	0 ÷ 25	60	100
ESP002026500	0 ÷ 50	100	140
ESP00202610D	0 ÷ 100	200	400
ESP00202616D	0 ÷ 160	300	450
ESP00202620D	0 ÷ 200	400	600
ESP00202625D	0 ÷ 250	500	650
ESP00202640D	0 ÷ 400	550	700
ESP00202660D	0 ÷ 600	750	900

使用	工业应用	**Use**	Industrial applications
传感器	陶瓷元件	**Sensor**	ceramic element
输出	4...20 mA	**Output**	4...20 mA
精度	≤1% (Span) (BSFL - IEC 61298 - 2) 非线性+迟滞+重复性	**Accuracy**	≤1% (Span) (BSFL - IEC 61298 - 2) Non linearity + Hysteresis + Repeatibility
响应时间	≤ 4 ms (90% of F.S.)	**Response time**	≤ 4 ms (90% of F.S.)
温度漂移	最高+/- 1.5%，范围10-50°C（跨度）	**Thermal drift**	+/- 1,5% max in range 10-50°C (Span)
机体	316L 不锈钢 (可定制)	**Material Case**	stainless steel 316 L (others on request)
与工作流体接触的材料	不锈钢, 陶瓷和FPM密封	**Material medium wetted parts**	stainless steel, ceramic and sealing FPM
螺纹 (X3)	G 1/4" 符合DIN 3852-E规定 可定制	**Thread (X3)**	G 1/4" according to DIN 3852-E others on request
最大扭力	20 Nm (建议)	**Tightening torque**	20 Nm (recommended)
电气连接	连接器 M12x1	**Electrical connection**	connector M12x1
防护等级	IP 67	**Protection degree**	IP 67
电压	8...30 Vdc R_L max = 50 Vcc -400 - R_L min = 50 Vcc -750	**Supply voltage**	8...30 Vdc R_L max = 50 Vcc -400 - R_L min = 50 Vcc -750
电流消耗	≤ 25 mA	**Current consumption**	≤ 25 mA
温度范围		**TEMPERATURE RANGES**	
补偿温度	0...80°C	**compensated**	0...80°C
储存温度	-20...80°C (可选: -40 ÷ +125°C)	**storage**	-20...80°C (Option: -40 ÷ +125°C)
调节螺丝	0...80°C (可选: -40 ÷ +105°C)	**media**	0...80°C (Option: -40 ÷ +105°C)
室温	0...80°C	**ambient**	0...80°C
预期寿命	> 1000万次循环	**Life expectancy**	> 10 million cycles
重量	~ 80g	**Weight**	~ 80g

有任何技术和应用需求，请联系我们的技术部 *For technical and application details contact our technical office.*
请参阅Euroswitch20-03-1压力开关目录册，第11-15页的一般说明，以便正确使用。*For a correct use please refer to "General Notes" in the pressure switches Euroswitch catalogue 20-03-1, p. 11-15.*
本公司保留随时修改产品技术特征或停止生产的权利，恕不另行通知。*The Company reserves the right to modify the technical features of the products or halt production at any time without notice.*

配件 - *Accessories*

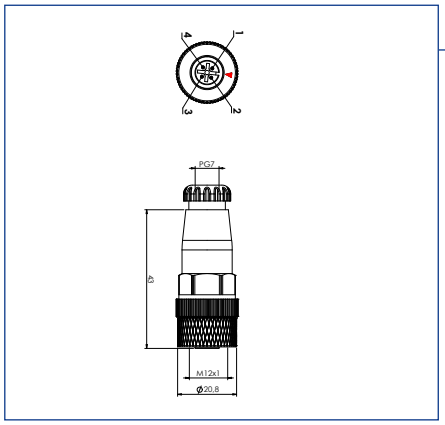

编码 CNN004-006
M12连接器需要接线
M12 connector to be wired

IEC 61076-2-101

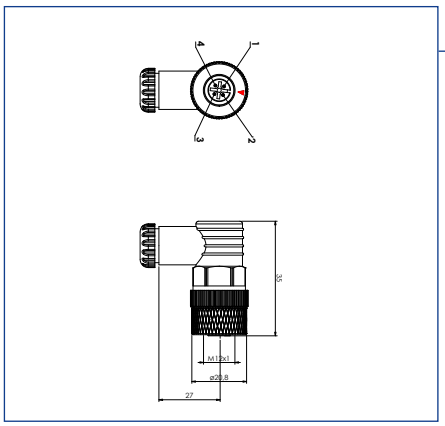

编码 CNN004-007
M12连接器需要90°接线
M12 connector to be wired angled 90°

IEC 61076-2-101

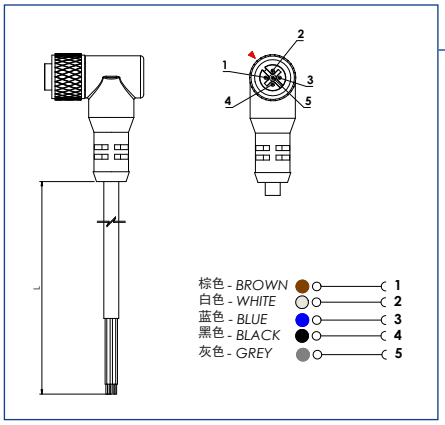

编码 CBL200-002
2 m电缆，带M12 90°连接器
2 mt cable with connector M12 angled 90°

IEC 61076-2-101

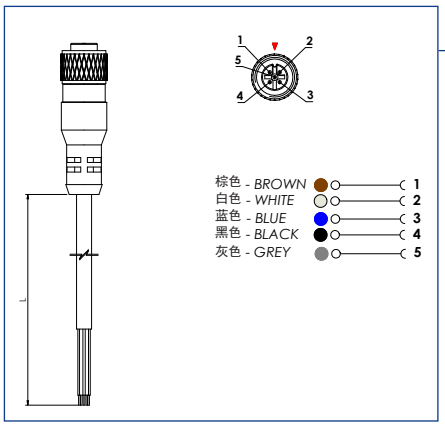

编码 CBL200-001
2 m电缆，带M12连接器
2 mt cable with connector M12

IEC 61076-2-101

笔记
Notes

EUROSWITCH
excellence in sensors

笔记
Notes

EUROSWITCH
excellence in sensors

集团实力

MONT.EL 集团专业从事布线系统、电子设备和传感器的设计和制造。这是一个整合外部资源的公司网络，能够提供联合工程设计或根据客户所提供图纸设计的完整产品。我们致力于实现高品质、高效率、精准度和可靠性的原则。MONT.EL集团的网络系统依托于六家公司的职业精神、多年经验和专业能力！其中有四家公司位于意大利境内：分别是MONT.EL（布线系 统），INTEA（电子传动与控制设备的设计和制造），EUROSWITCH（液位传感器、压力传感器、温度传感器和旋转传感器），AME（电气设备）；两家位于罗马尼亚境内：SIRE（布线系统、机电组件的生产装配）和TECHTRON（电子设备）。

the group's strengths

The MONT.EL Group specialises in the design and manufacture of wiring systems, and electric and electronic equipment and sensors. It is a fully integrated network of companies dealing with advanced outsourcing that can offer a complete product, which is co-engineered or made to customer drawing, and features superior quality, efficiency, accuracy and maximum reliability.
The MONT.EL Group relies on the professional skill, know-how and expertise of the six member companies. Four are based in Italy - MONT.EL (wiring systems), INTEA (design and development of electronic drive and control equipment), EUROSWITCH (level, pressure, temperature and rotation sensors), and AME (electrical equipment) and two in Romania - SIRE (wiring systems and electro-mechanical assemblies) and TECHTRON (electronic equipment).

MONT.EL

布线系统电子设备

electric and electronic equipment

EUROSWITCH

液位、压力、温度传感器

level, pressure, temperature sensors

INTEA ENGINEERING

应用电子技术
applied electronic technologies

AME

电气设备
electrical equipment

SIRE

布线及装配
wirings, assembly

TECHTRON

电子设备
electronic equipments

EUROSWITCH
excellence in sensors

Via Provinciale, 15
25057 Sale Marasino (BS) Italy
Tel. +39 030 986549 - Fax +39 030 9824202
e-mail: info@euroswitch.it
www.euroswitch.it

Edizione - 20-03-1